IDROFAN®

42GW

4-WAY CASSETTE

- Easy installation
- Centralised diffusion
- Low energy consumption
- Optimised comfort
- Aesthetically integrated into suspended ceilings
- Quiet operation

Carrier's Idrofan cassettes 42GW_AC/LEC offer a modern solution for a host of commercial applications. They are particularly suitable for big offices, stores, restaurants, bars, hotel receptions, meeting rooms, banks, laboratories and exhibition rooms.

Rated cooling capacity:
1,5 - 9,5 kW

Rated heating capacity:
1,3 - 11,3 kW

EUROVENT CERTIFIED PERFORMANCE
www.eurovent-certification.com

CARRIER participates in the ECP programme for FC-FCP Check ongoing validity of certificate: www.eurovent-certification.com

Carrier

Translation of the original document

Technical description

- The 42GW_AC is available with a 3-speed AC motor. The 42GW_LEC is available with a variable speed low energy consumption (LEC) motor.
- The 42GW is installed in suspended ceilings, and can provide two, three or four-way diffusion. These units maintain the requisite temperature and humidity degree with precision, while preventing draughts and formation of areas of stagnant air.
- The air inlet grille blends in nicely with all types of interior.
- Carrier's hydraulic cassette is available in 6 sizes, to suit a vast range of applications, with air flows ranging from 100 to 402 l/s (360 to 1450 m^3/h). The Idrofan cassette offers an ultra-low noise level, for situations where low noise level is the most important selection criterion.

General specifications

- The slimline 42GW is light and easy to install. The small frame is perfectly suited to conventional ceiling tiles, and is easy to install anywhere.
- Comfort is ensured by four-way air supply. It is possible to adjust the degree of opening on each diffuser.
- Integrated cooling and heating coils, which come factory-fitted, for two-pipe or two-pipe plus electrical heater applications, as well as 4-pipe applications.

Designed for quiet

- 42GW units have been designed especially to operate very quietly, with noise levels which represent new comfort levels for buildings. The unique design of the centrifugal fan ensures very quiet operation.
- The new design of the fan/motor block ensures quiet operation (half the noise of the previous model). Particular attention has been paid to low-speed operation of the fan.
- The special shape of the diffuser ensures a rapid mix of supply air and ambient air. Conditioned air is blown against the ceiling, and then distributed uniformly throughout the room. The return air enters the cassette via a large grille. It is then cleaned by a removable and washable synthetic filter, conditioned and then supplied again.

Motors

- The Idrofan is available with a three-speed AC motor, with ultra-low noise levels, which makes it one of the quietest cassettes on the market.
- The Idrofan is also available with variable speed LEC motors (low energy consumption), which meet the new building energy performance objectives. The low energy consumption solution improves the unit's performances, bringing you:
  - Lower energy costs – the LEC motor reduces the unit's energy consumption by 50 to 70%. This option meets the new regulations in terms of building energy management.
  - Better comfort – the variable speed low energy consumption motor reduces the noise level compared to multi-speed motors, making for an ultra-quiet air flow, even at very low operating levels. Thanks to the NTC control, a maximum fan speed can be set to better manage noise level.
  - Maximum flexibility – the air flow automatically adapts from 0 to 100%, ensuring perfect cooling or heating conditions in the room.
  - Extended service life – low energy consumption LEC technology motors run at lower fan motor temperatures, which extends their service life.

Filters

- The standard filter used for the Idrofan range has a pleated filtration surface, which provides a surface area 87% larger than a traditional filter, as well as the following additional advantages:
  - Low pressure drop, consumption and noise level.
  - The mean filter cleaning interval is three times longer than for standard filters.
  - EU1 grade polypropylene-based filter.
- In the Idrofan cassette range, the filter is situated in the unit's grille. Cleaning is simple: you need only detach the filter manually from the support on the grille. The filter frame can be lowered, and the filter can be easily removed. Refitting is just as simple, you need only follow the procedure in reverse. Washable filters are supplied in the standard version.

Condensate drain pump

- Self-contained, very high-performance condensate drain pump flush-mounted in soundproofing material, for better condensate management - quick and quiet.
- The cassette's main condensate pan has been improved thanks to use of the very latest composite materials, to provide better noise absorption, easier cleaning and better condensed water transfer from the coil to the discharge pump.

Technical description

Electrics box

- All the units are equipped with an electrics box, which contains the terminal strips.This box is located on the outside of the unit. The box cover is easy to open: you need only remove a mounting bolt. For more details on the electrical connections, please consult the appropriate wiring prints.

Carrier controllers range

- The Idrofan is available with the complete range of Carrier controllers. Several types facilitate installation. The number of controllers offers an abundance of solutions and makes selection easy, according to its application.
  - A-B-C-D type electronic thermostats.
  - The Carrier electronic thermostats range is available for all Carrier hot water terminal ranges.
  - Type A: a two-pipe application equipped with alternating current motors.
  - Type B: four pipe applications equipped with alternating current motors.
  - Type C: a two-pipe application equipped with EC motors and electric heating.
  - Type D: four pipe applications equipped with EC motors.

NTC

- A PID controller can communicate and combine energy savings algorithms with solutions providing compete control functions, compatible with the Aquasmart Evolution system. The NTC control is compatible with the low energy consumption motor option, and combines energy savings with optimised comfort.

Valve types available

- Valve bodies: both types of valve, two-way or four-way (three-way with integral by-pass) are factory-fitted and subjected to factory tests. These chilled water valves are completely insulated in a moulded insulant jacket, which prevents condensation from forming on the valve body. This new jacket reduces the complexity of the range and prevents the risk of water leaks. These valves can be factory-fitted on the unit side.

WTC controller

- Open Communication protocol BACnet or LON.
- Communication PID controller.
- Large range of user interfaces, wall mounted or remote.
- Manages the EC motor for optimised comfort.
- Manages a CO_2 sensor to improve air quality.
- Optional lighting and/or blinds management modules, controlled from the same user interface.
- Large range of sensors (light, presence, etc.).

Valve types available

- Valve bodies: both types of valve, two-way or four-way (three-way with integral by-pass) are factory-fitted and subjected to factory tests. These chilled water valves are completely insulated in a moulded insulant jacket, which prevents condensation from forming on the valve body. This new jacket reduces the complexity of the range and prevents the risk of water leaks. These valves can be factory-fitted on the unit side.

Insulating moulded jacket for the valve

- Valve actuators: Carrier has a vast range of valve actuators with two or four-way valve bodies, which offer the most suitable solution whatever the control type and the customer's requirements, from on/off to proportional type, and a 230 V or 24 V power supply:
  - 230 V on/off actuator.
  - 24 V on/off actuator.
  - 230 V 3-point floating actuator.
  - 24 V 3-point floating actuator.
- When combining low energy consumption motors with an NTC control, it is recommended to use 230 V three-point floating actuators, to increase energy savings and improve comfort.

Technical description

Auxiliary condensate pan

- An auxiliary condensate pan is available as an accessory if the water valves, shut-off valves or balancing valves are customer supplied. Conversely, the auxiliary condensate pan is not required if you have water valves factory-fitted by Carrier, since they come supplied with an insulated valve body (insulating moulded jacket), which prevents condensation.

Auxiliary drain pan for units 42GW_S/E 200/209, 300/309, 400/409

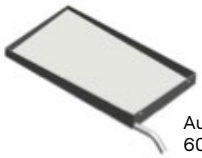

Auxiliary drain pan for units 42GW_S/E 500/509, 600/609, 701/709

Electrical heater option

- There is an electrical heater option only on models with a two-pipe coil. There is an electrical heater available for each Idrofan cassette size, factory-fitted to ensure reliable and completely safe operation.

Fresh air inlet option

- All the units have couplings provided for fresh air inlet ducts, which can considerably improve the indoor air quality, while the fresh air intake volume is regulated by the CO_2 sensor by means of the NTC control.
- The fresh air flow must represent less than 10% of the total air flow, to prevent operating problems and excessive noise. For a higher air flow, there is a primary air kit which can be fitted on the precut hole provided for an air duct in the adjacent room, and a noise barrier, such that the fresh air enters the room via a diffuser.

Conditioned air supply via a duct in an adjacent room

- This option supplies conditioned air in a room situated near the Idrofan cassette, via an air duct (customer supplied). If this option is used, the supply air opening corresponding to the duct must be closed, using the air discharge outlet closing kit supplied. This kit cannot be used in units fitted with an electrical heater. An air inlet grille must be fitted (if possible near the floor) between the air conditioned room (where the unit is) and the adjacent room; or a cut-out can be made at the bottom of the door.
- The duct lengths can be calculated in accordance with the "air distribution in an adjacent room" diagram, which figures in the installation, operation and maintenance manual, also taking into account the pressure drop via the air diffusers and the fresh air filters.

Ease of maintenance

- All of the main components (motors, fans and discharge pump) are accessible from the unit base; you need only remove the grille. These components can also be removed without having to touch the other components or removing the surrounding ceiling tiles.

Physical and electrical specifications, units with AC motors

42GW		200C			300C			400C		
Coil type		**2-pipe**			**2-pipe**			**2-pipe**		
Fan speed①		**1**	**2**	**3**	**1**	**2**	**3**	**1**	**2**	**3**
Air flow	l/s	183	125	100	204	140	89	249	173	134
	m³/h	660	450	360	735	505	320	900	625	485
Cooling										
Total cooling capacity	kW	2,33	1,74	1,53	3,96	2,86	1,86	4,64	3,46	2,77
Sensible cooling capacity	kW	1,95	1,46	1,28	3,01	2,16	1,41	3,57	2,64	2,11
Water flow	l/s	0,11	0,09	0,08	0,19	0,14	0,09	0,23	0,17	0,13
	l/h	410	310	270	690	500	320	810	600	480
Water pressure drop, cooling	kPa	11,1	6,8	5,6	15,2	8,6	4,7	19,8	11,6	7,9
Heating mode										
Heating capacity	kW	2,74	2,17	1,92	3,68	3,15	1,94	5,28	3,92	3,16
Water flow	l/s	0,13	0,11	0,09	0,18	0,15	0,09	0,26	0,19	0,15
	l/h	480	380	330	640	550	340	920	680	550
Water pressure drop, heating	kPa	11,8	8,4	7,1	12,8	10,1	5,0	18,6	11,7	8,4
Water volume	l	0,55			1,1			1,1		
Sound levels										
Sound power level	dB(A)	49	41	37	53	47	35	57	48	42
Sound pressure level	dB(A)	40	32	28	44	38	26	48	39	33
NR value②		36	28	25	40	31	20	43	34	28
Power input	W	58	35	25	58	34	17	99	58	38
Current	A	0,27	0,17	0,12	0,24	0,14	0,07	0,41	0,24	0,16
EUROVENT FCEER energy class (cooling mode)		D			C			D		
EUROVENT FCCOP energy class (heating mode)		E			D			D		
Electrical heater										
High capacity @240V	W	1500			2500			2500		
Current (high capacity) @240V	A	6,3			10,4			10,4		
Coil connection diameter	inches	3/4 " gas			3/4" gas			3/4 " gas		
Condensate diameter	mm	16			16			16		
Weight, unit	kg	14,8			16,5			16,5		
Weight, grille	kg	3			3			3		

Based on Eurovent conditions:
Cooling mode (2 and 4-pipe coils): entering air temperature 27°C dry bulb/19°C wet bulb, 7°C/12°C entering and leaving water temperature
Heating mode (2-pipe coil): air temperature 20°C, 45°C/40°C entering and leaving water temperature
Heating mode (4-pipe coil): air temperature 20°C, 65°C/55°C entering and leaving water temperature
① Speeds: 1 = high, 2 = medium, 3 = low
② Sound pressure level and NR values with hypothetical noise attenuation of the room of -9 dB(A).
NOTE: the version with an electrical heater is available on all 2-pipe units

EUROVENT CERTIFIED PERFORMANCE
www.eurovent-certification.com

Eurovent certified values

CARRIER participates in the ECP programme for FC-FCP. Check ongoing validity of certificate: www.eurovent-certification.com

Physical and electrical specifications, units with AC motors

42GW		500C			600C			701C		
Coil type		**2-pipe**			**2-pipe**			**2-pipe**		
Fan speed①		**1**	**2**	**3**	**1**	**2**	**3**	**1**	**2**	**3**
Air flow	l/s	272	199	147	321	229	139	402	299	166
	m³/h	980	720	530	1160	825	500	1450	1080	600
Cooling										
Total cooling capacity	kW	6,03	4,41	3,33	7,13	5,43	3,68	8,54	6,43	4,02
Sensible cooling capacity	kW	4,68	3,44	2,58	5,37	4,03	2,66	6,34	4,81	2,95
Water flow	l/s	0,29	0,21	0,16	0,34	0,26	0,18	0,41	0,31	0,19
	l/h	1050	760	580	1240	940	640	1490	1120	700
Water pressure drop, cooling	kPa	23,8	13,4	8,3	12,4	7,8	4,6	21,9	13,1	6
Heating mode										
Heating capacity	kW	6,84	5,08	3,8	8,51	6,26	3,85	10,28	7,95	4,38
Water flow	l/s	0,33	0,24	0,18	0,41	0,30	0,19	0,50	0,38	0,21
	l/h	1190	880	660	1480	1090	670	1790	1380	760
Water pressure drop, heating	kPa	23,1	14,4	9,2	15,3	9,6	4,8	26	17	5
Water volume	l	1,6			2,4			2,4		
Sound levels										
Sound power level	dB(A)	49	40	35	54	46	38	59	52	40
Sound pressure level	dB(A)	40	31	26	45	37	29	50	43	31
NR value②		35	26	21	40	32	22	45	38	25
Power input	W	66	41	28	88	61	34	125	92	44
Current	A	0,30	0,17	0,12	0,46	0,27	0,14	0,63	0,41	0,19
EUROVENT FCEER energy class (cooling mode)		C			C			D		
EUROVENT FCCOP energy class (heating mode)		C			C			D		
Electrical heater										
High capacity @240V	W	3000			3000			3000		
Current (high capacity) @240V	A	12,5			12,5			12,5		
Coil connection diameter	inches	1" gas			1" gas			1" gas		
Condensate diameter	mm	16			16			12,5		
Weight, unit	kg	37			39,6			39,6		
Weight, grille	kg	5			5			5		

Based on Eurovent conditions:
Cooling mode (2 and 4-pipe coils): entering air temperature 27°C dry bulb/19°C wet bulb, 7°C/12°C entering and leaving water temperature
Heating mode (2-pipe coil): air temperature 20°C, 45°C/40°C entering and leaving water temperature
Heating mode (4-pipe coil): air temperature 20°C, 65°C/55°C entering and leaving water temperature
① Speeds: 1 = high, 2 = medium, 3 = low
② Sound pressure level and NR values with hypothetical noise attenuation of the room of -9 dB(A).
NOTE: the version with an electrical heater is available on all 2-pipe units

EUROVENT CERTIFIED PERFORMANCE
www.eurovent-certification.com

CARRIER participates in the ECP programme for FC-FCP. Check ongoing validity of certificate: www.eurovent-certification.com

Eurovent certified values

Physical and electrical specifications, units with AC motors

42GW		200D			300D			400D		
Coil type		**4-pipe**			**4-pipe**			**4-pipe**		
Fan speed①		**1**	**2**	**3**	**1**	**2**	**3**	**1**	**2**	**3**
Air flow	l/s	183	125	100	204	140	89	249	173	134
	m³/h	660	450	360	735	505	320	900	625	485
Cooling										
Total cooling capacity	kW	1,97	1,49	1,34	3,34	2,67	1,98	3,95	3,18	2,53
Sensible cooling capacity	kW	1,84	1,37	1,18	2,62	2,05	1,49	3,25	2,55	2,04
Water flow	l/s	0,10	0,07	0,06	0,17	0,13	0,10	0,20	0,16	0,12
	l/h	350	260	230	580	460	340	700	560	440
Water pressure drop, cooling	kPa	14,9	9,1	7,6	12,6	8,6	5,6	16,5	11,2	7,6
Water volume, cooling	l	0,4			1,1			1,1		
Heating mode										
Heating capacity	kW	1,67	1,27	1,09	5,46	4,4	3,1	5,8	5	4,32
Water flow rate	l/s	0,04	0,03	0,03	0,15	0,12	0,09	0,16	0,14	0,12
	l/h	150	110	100	548	439	310	585	499	430
Water pressure drop, heating	kPa	29,5	18,8	14,8	21,1	14,8	8,5	24,2	18,9	15
Water volume	l	0,1			0,6			0,6		
Sound levels										
Sound power level	dB(A)	49	41	37	53	47	35	57	48	42
Sound pressure level	dB(A)	40	32	28	47	38	26	48	39	33
NR value②		36	28	25	40	31	20	43	34	28
Power input	W	58	35	25	58	34	17	99	58	38
Current	A	0,27	0,17	0,12	0,24	0,14	0,07	0,41	0,24	0,16
EUROVENT FCEER energy class (cooling mode)		E			C			D		
EUROVENT FCCOP energy class (heating mode)		E			C			D		
Connection diameter										
Cooling coil	inches	3/4 " gas			3/4 " gas			3/4 " gas		
Heating coil	inches	1/2 " gas			1/2 " gas			1/2 " gas		
Condensate diameter	mm	16			16			16		
Unit weight	kg	14,8			16,5			16,5		
Grille weight	kg	3			3			3		

Based on Eurovent conditions:
Cooling mode (2 and 4-pipe coils): entering air temperature 27°C dry bulb/19°C wet bulb, 7°C/12°C entering and leaving water temperature
Heating mode (2-pipe coil): air temperature 20°C, 45°C/40°C entering and leaving water temperature
Heating mode (4-pipe coil): air temperature 20°C, 65°C/55°C entering and leaving water temperature
① Speeds: 1 = high, 2 = medium, 3 = low
② Sound pressure level and NR values with hypothetical noise attenuation of the room of -9 dB(A).
NOTE: the version with an electrical heater is available on all 2-pipe units

EUROVENT CERTIFIED PERFORMANCE
www.eurovent-certification.com

Eurovent certified values

CARRIER participates in the ECP programme for FC-FCP. Check ongoing validity of certificate: www.eurovent-certification.com

Physical and electrical specifications, units with AC motors

42GW		600D			701D		
Coil type		**4-pipe**			**4-pipe**		
Fan speed①		**1**	**2**	**3**	**1**	**2**	**3**
Air flow	l/s	321	229	139	402	299	166
	m³/h	1160	825	500	1450	1080	600
Cooling							
Total cooling capacity	kW	6,58	4,93	2,96	7,49	5,97	3,14
Sensible cooling capacity	kW	5,08	3,78	2,31	5,89	4,64	2,53
Water flow	l/s	0,32	0,24	0,14	0,39	0,32	0,18
	l/h	1140	860	510	1310	1040	550
Water pressure drop, cooling	kPa	25,2	15,3	6,5	31,5	21,8	7,1
Water volume, cooling	l	2,4			2,4		
Heating mode							
Heating capacity	kW	10,04	7,79	5,28	12,77	10,07	6,43
Water flow rate	l/s	0,27	0,21	0,14	0,35	0,27	0,17
	l/h	989	765	516	1247	989	628
Water pressure drop, heating	kPa	12,3	8,4	5,1	17,9	12,3	6,5
Water volume	l	1,2			1,2		
Sound levels							
Sound power level	dB(A)	54	46	38	59	52	40
Sound pressure level	dB(A)	45	37	29	50	43	31
NR value②		40	32	22	45	38	25
Power input	W	88	61	34	125	92	44
Current	A	0,46	0,27	0,14	0,63	0,41	0,19
EUROVENT FCEER energy class (cooling mode)		C			D		
EUROVENT FCCOP energy class (heating mode)		C			C		
Connection diameter							
Cooling coil	inches	1" gas			1" gas		
Heating coil	inches	3/4 " gas			3/4 " gas		
Condensate diameter	mm	16			16		
Unit weight	kg	39,6			39,6		
Grille weight	kg	5			5		

Based on Eurovent conditions:
Cooling mode (2 and 4-pipe coils): entering air temperature 27°C dry bulb/19°C wet bulb, 7°C/12°C entering and leaving water temperature
Heating mode (2-pipe coil): air temperature 20°C, 45°C/40°C entering and leaving water temperature
Heating mode (4-pipe coil): air temperature 20°C, 65°C/55°C entering and leaving water temperature
① Speeds: 1 = high, 2 = medium, 3 = low
② Sound pressure level and NR values with hypothetical noise attenuation of the room of -9 dB(A).
NOTE: the version with an electrical heater is available on all 2-pipe units

EUROVENT CERTIFIED PERFORMANCE
www.eurovent-certification.com

CARRIER participates in the ECP programme for FC-FCP. Check ongoing validity of certificate: www.eurovent-certification.com

Eurovent certified values

Physical and electrical specifications, units with AC motors

42GW		209C			309C			409C		
Coil type		**2-pipe**			**2-pipe**			**2-pipe**		
Fan speed①		**1**	**2**	**3**	**1**	**2**	**3**	**1**	**2**	**3**
Voltage (DC)	V	10	6	2	10	6	2	10	6	2
Air flow	l/s	183	125	100	204	140	89	249	173	134
	m³/h	660	450	360	735	505	320	900	625	485
Cooling										
Total cooling capacity	kW	2,36	1,77	1,54	3,98	2,88	1,87	4,68	3,5	2,79
Sensible cooling capacity	kW	1,98	1,49	1,29	3,04	2,18	1,42	3,61	2,67	2,13
Water flow rate	l/s	0,11	0,09	0,08	0,19	0,14	0,09	0,23	0,17	0,13
	l/h	410	310	270	690	500	320	810	600	480
Water side pressure drop, cooling	kPa	11,1	6,8	5,6	15,2	8,6	4,7	19,8	11,6	7,9
Heating mode										
Heating capacity	kW	2,74	2,17	1,92	3,68	3,15	1,94	5,28	3,92	3,16
Water flow	l/s	0,13	0,11	0,09	0,18	0,15	0,09	0,26	0,19	0,13
	l/h	480	380	330	640	550	340	920	680	480
Water pressure drop, heating	kPa	11,8	8,4	7,1	12,8	10,1	5	18,6	11,7	8,5
Water volume	l	0,55			1,1			1,1		
Sound levels										
Sound power level	dB(A)	49	40	36	53	44	35	57	48	42
Sound pressure level	dB(A)	40	31	27	44	35	26	48	39	33
NR value②		35	27	23	40	31	20	43	35	29
Power input	W	29	13	9	33	14	7	57	23	13
Current	A	0,19	0,1	0,08	0,27	0,13	0,08	0,46	0,2	0,12
EUROVENT FCEER energy class (cooling mode)		B			A			B		
EUROVENT FCCOP energy class (heating mode)		B			B			B		
Electrical heater										
High capacity @240V	W	1500			2500			2500		
Current (high capacity) @240V	A	6,3			10,4			10,4		
Coil connection diameter	inches	3/4 " gas			3/4" gas			3/4 " gas		
Condensate diameter	mm	16			16			16		
Weight, unit	kg	14,8			16,5			16,5		
Weight, grille	kg	3			3			3		

Based on Eurovent conditions:
Cooling mode (2 and 4-pipe coils): entering air temperature 27°C dry bulb/19°C wet bulb, 7°C/12°C entering and leaving water temperature
Heating mode (2-pipe coil): air temperature 20°C, 45°C/40°C entering and leaving water temperature
Heating mode (4-pipe coil): air temperature 20°C, 65°C/55°C entering and leaving water temperature
① Speeds: 1 = high, 2 = medium, 3 = low
② Sound pressure level and NR values with hypothetical noise attenuation of the room of -9 dB(A).
NOTE: the version with an electrical heater is available on all 2-pipe units

EUROVENT CERTIFIED PERFORMANCE
www.eurovent-certification.com

Eurovent certified values

CARRIER participates in the ECP programme for FC-FCP. Check ongoing validity of certificate: www.eurovent-certification.com

Physical and electrical specifications, units with AC motors

42GW		509C			609C			709C		
Coil type		**2-pipe**			**2-pipe**			**2-pipe**		
Fan speed①		**1**	**2**	**3**	**1**	**2**	**3**	**1**	**2**	**3**
Voltage (DC)	V	10	6	2	10	6	2	10	6	2
Air flow	l/s	272	199	147	321	229	139	443	299	166
	m³/h	980	720	530	1160	825	500	1600	1080	600
Cooling										
Total cooling capacity	kW	6,08	4,44	3,35	7,19	5,47	3,71	9,55	6,49	4,05
Sensible cooling capacity	kW	4,49	3,36	2,53	5,43	4,07	2,68	7,16	4,86	2,98
Water flow rate	l/s	0,29	0,21	0,16	0,34	0,26	0,18	0,46	0,31	0,19
	l/h	1050	760	580	1240	940	640	1660	1120	700
Water side pressure drop, cooling	kPa	23,8	13,4	8,3	12,4	7,8	4,6	26,9	13,1	6
Heating mode										
Heating capacity	kW	6,84	5,08	3,8	8,51	6,26	3,85	11,03	7,95	4,38
Water flow	l/s	0,33	0,24	0,18	0,41	0,30	0,19	0,53	0,38	0,21
	l/h	1190	880	660	1480	1090	670	1920	1380	760
Water pressure drop, heating	kPa	23,1	14,4	9,2	15,3	9,6	4,8	30,6	18	7,2
Water volume	l	1,6			2,4			2,4		
Sound levels										
Sound power level	dB(A)	49	40	35	54	46	38	61	52	40
Sound pressure level	dB(A)	40	31	26	45	37	29	52	43	31
NR value②		35	26	20	39	32	22	47	38	25
Power input	W	25	12	7	45	23	9	115	40	11
Current	A	0,23	0,12	0,08	0,4	0,22	0,1	0,89	0,35	0,12
EUROVENT FCEER energy class (cooling mode)		A			A			A		
EUROVENT FCCOP energy class (heating mode)		A			A			B		
Electrical heater										
High capacity @240V	W	3000			3000			3000		
Current (high capacity) @240V	A	12,5			12,5			12,5		
Coil connection diameter	inches	1" gas			1" gas			1" gas		
Condensate diameter	mm	16			16			12,5		
Weight, unit	kg	37			39,6			39,6		
Weight, grille	kg	5			5			5		

Based on Eurovent conditions:
Cooling mode (2 and 4-pipe coils): entering air temperature 27°C dry bulb/19°C wet bulb, 7°C/12°C entering and leaving water temperature
Heating mode (2-pipe coil): air temperature 20°C, 45°C/40°C entering and leaving water temperature
Heating mode (4-pipe coil): air temperature 20°C, 65°C/55°C entering and leaving water temperature
① Speeds: 1 = high, 2 = medium, 3 = low
② Sound pressure level and NR values with hypothetical noise attenuation of the room of -9 dB(A).
NOTE: the version with an electrical heater is available on all 2-pipe units

EUROVENT CERTIFIED PERFORMANCE
www.eurovent-certification.com

Eurovent certified values

CARRIER participates in the ECP programme for FC-FCP. Check ongoing validity of certificate: www.eurovent-certification.com

Physical and electrical specifications, units with AC motors

42GW		209D			309D			409D		
Coil type		**4-pipe**			**4-pipe**			**4-pipe**		
Fan speed①		**1**	**2**	**3**	**1**	**2**	**3**	**1**	**2**	**3**
Voltage (DC)	V	10	6	2	10	6	2	10	6	2
Air flow	l/s	183	125	100	204	140	89	249	173	134
	m³/h	660	450	360	735	505	320	900	625	485
Cooling										
Total cooling capacity	kW	1,97	1,49	1,34	3,34	2,67	1,98	3,95	3,18	2,53
Sensible cooling capacity	kW	1,84	1,37	1,18	2,62	2,05	1,49	3,25	2,55	2,04
Water flow	l/s	0,10	0,07	0,06	0,17	0,13	0,10	0,20	0,16	0,12
	l/h	350	260	230	580	460	340	700	560	440
Water pressure drop, cooling	kPa	14,9	9,1	7,6	12,6	8,6	5,6	16,5	11,2	7,6
Water volume, cooling	l	0,4			1,1			1,1		
Heating mode										
Heating capacity	kW	1,67	1,27	1,09	5,46	4,4	3,1	5,8	5	4,32
Water flow	l/s	0,04	0,03	0,03	0,13	0,11	0,08	0,14	0,12	0,11
	l/h	150	110	100	480	390	270	510	440	380
Water pressure drop, heating	kPa	29,5	18,8	14,8	21,1	14,8	8,5	24,2	18,9	15
Water volume	l	0,1			0,6			0,6		
Sound levels										
Sound power level	dB(A)	49	40	36	53	44	35	57	48	42
Sound pressure level	dB(A)	40	31	27	44	35	26	53	39	33
NR value②		35	27	23	40	31	20	43	35	29
Power input	W	29	13	9	33	14	7	57	23	13
Current	A	0,19	0,1	0,08	0,27	0,13	0,08	0,46	0,2	0,12
EUROVENT FCEER energy class (cooling mode)		B			A			B		
EUROVENT FCCOP energy class (heating mode)		C			A			B		
Connection diameter										
Cooling coil	inch	3/4 " gas			3/4 " gas			3/4 " gas		
Heating coil	inch	1/2 " gas			1/2 " gas			1/2 " gas		
Condensate diameter	mm	16			16			16		
Weight, unit	kg	14,8			14,8			14,8		
Heaters weight	kg	3			3			3		

Based on Eurovent conditions:
Cooling mode (2 and 4-pipe coils): entering air temperature 27°C dry bulb/19°C wet bulb, 7°C/12°C entering and leaving water temperature
Heating mode (2-pipe coil): air temperature 20°C, 45°C/40°C entering and leaving water temperature
Heating mode (4-pipe coil): air temperature 20°C, 65°C/55°C entering and leaving water temperature
① Speeds: 1 = high, 2 = medium, 3 = low
② Sound pressure level and NR values with hypothetical noise attenuation of the room of -9 dB(A).
NOTE: the version with an electrical heater is available on all 2-pipe units

EUROVENT CERTIFIED PERFORMANCE
www.eurovent-certification.com

Eurovent certified values

CARRIER participates in the ECP programme for FC-FCP. Check ongoing validity of certificate: www.eurovent-certification.com

Physical and electrical specifications, units with AC motors

42GW		609D			709D		
Coil type		**4-pipe**			**4-pipe**		
Fan speed①		**1**	**2**	**3**	**1**	**2**	**3**
Voltage (DC)	V	10	6	2	10	6	2
Air flow	l/s	321	229	139	443	299	166
	m³/h	1160	825	500	1600	1080	600
Cooling							
Total cooling capacity	kW	6,58	4,93	2,96	7,49	5,97	3,14
Sensible cooling capacity	kW	5,08	3,78	2,31	5,89	4,64	2,53
Water flow	l/s	0,32	0,24	0,14	0,36	0,29	0,15
	l/h	1140	860	510	1310	1040	550
Water pressure drop, cooling	kPa	25,2	15,3	6,5	31,5	21,8	7,1
Water volume, cooling	l	2,4			2,4		
Heating mode							
Heating capacity	kW	10,04	7,79	5,28	13,99	10,07	6,43
Water flow	l/s	0,24	0,19	0,13	0,31	0,24	0,16
	l/h	880	680	460	1120	880	560
Water pressure drop, heating	kPa	12,3	8,4	5,1	20,7	12,3	6,5
Water volume	l	1,2			1,2		
Sound levels							
Sound power level	dB(A)	54	46	38	61	52	40
Sound pressure level	dB(A)	45	37	29	52	43	31
NR value②		39	32	22	47	38	25
Power input	W	45	23	9	115	40	11
Current	A	0,4	0,22	0,1	0,89	0,35	0,12
EUROVENT FCEER energy class (cooling mode)		A			B		
EUROVENT FCCOP energy class (heating mode)		A			A		
Connection diameter							
Cooling coil	inch	1" gas			1" gas		
Heating coil	inch	3/4 " gas			3/4 " gas		
Condensate diameter	mm	16			12,5		
Weight, unit	kg	39,6			39,6		
Heaters weight	kg	5			5		

Based on Eurovent conditions:
Cooling mode (2 and 4-pipe coils): entering air temperature 27°C dry bulb/19°C wet bulb, 7°C/12°C entering and leaving water temperature
Heating mode (2-pipe coil): air temperature 20°C, 45°C/40°C entering and leaving water temperature
Heating mode (4-pipe coil): air temperature 20°C, 65°C/55°C entering and leaving water temperature
① Speeds: 1 = high, 2 = medium, 3 = low
② Sound pressure level and NR values with hypothetical noise attenuation of the room of -9 dB(A).
NOTE: the version with an electrical heater is available on all 2-pipe units

EUROVENT CERTIFIED PERFORMANCE
www.eurovent-certification.com

Eurovent certified values

CARRIER participates in the ECP programme for FC-FCP. Check ongoing validity of certificate: www.eurovent-certification.com

Dimensions, mm

42GW 200/209 - 300/309 - 400/409 (compact chassis)

Unit without valve

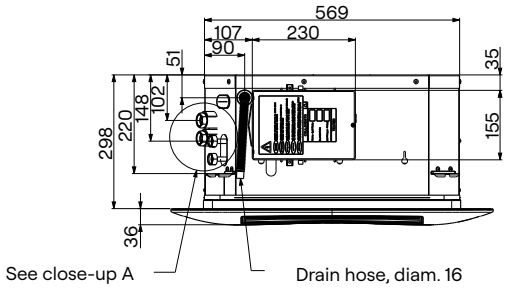

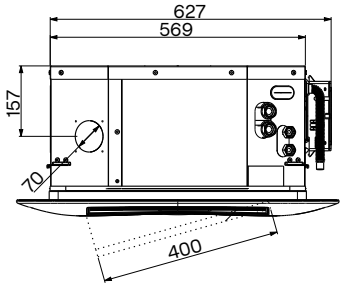

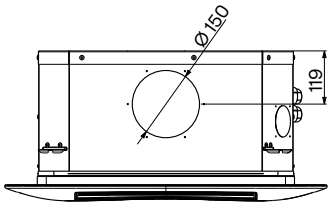

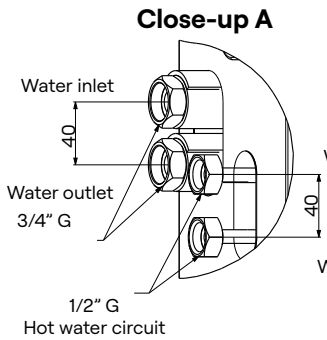

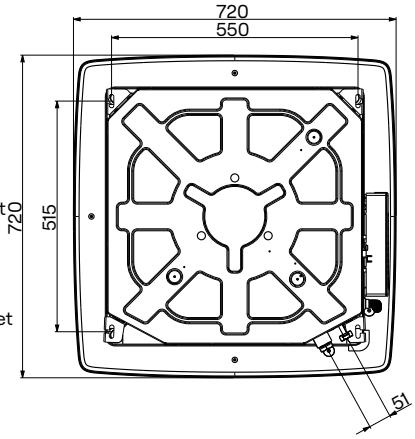

Unit with 2-way valve

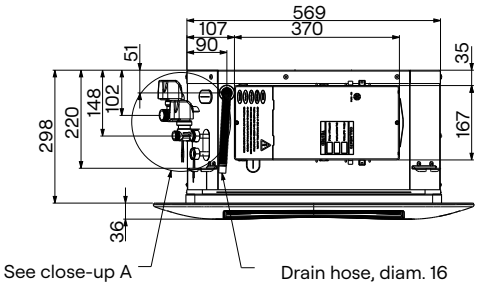

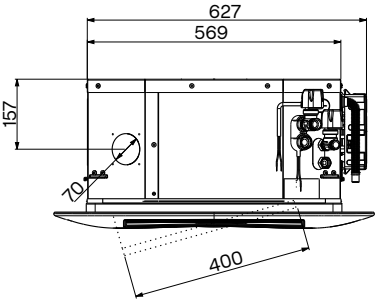

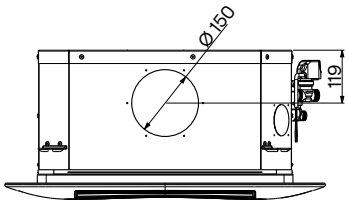

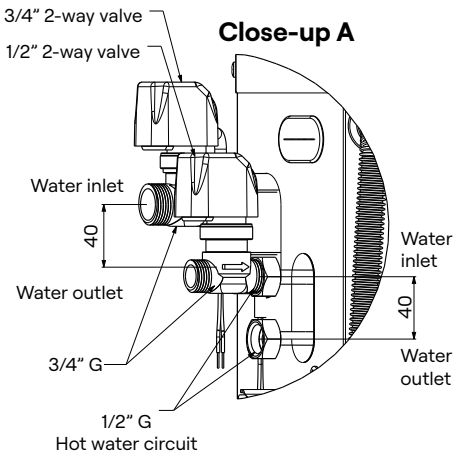

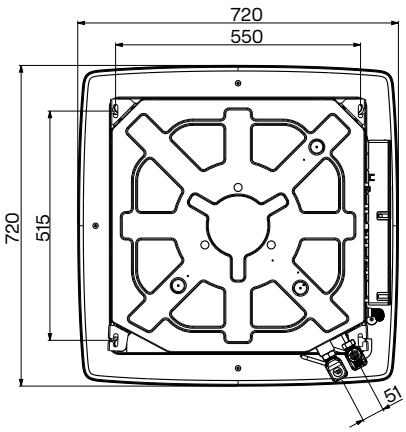

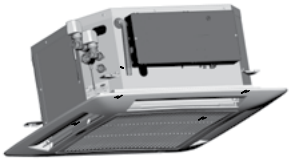

Dimensions, mm

42GW 200/209 - 300/309 - 400/409 (compact chassis)

Unit with 4-way valves

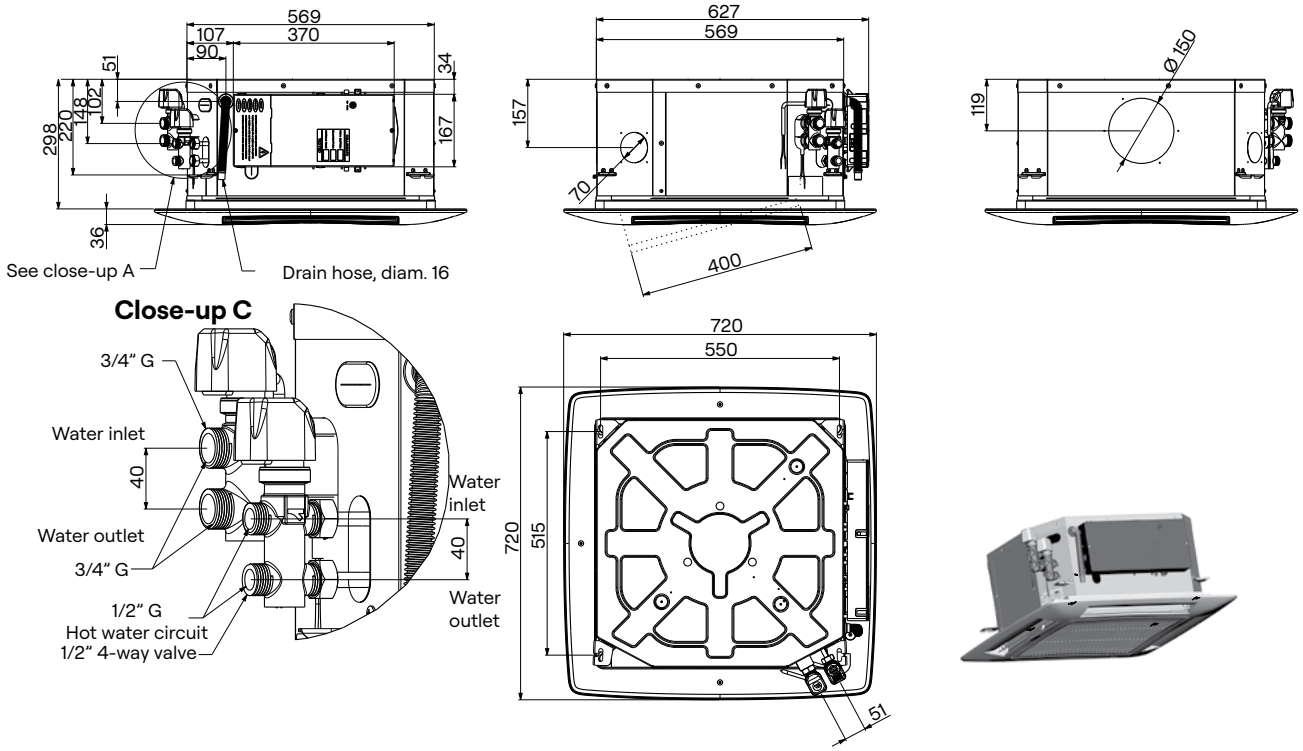

42GW 500/509 - 600/609 - 701/709 (big chassis)

Unit without valve

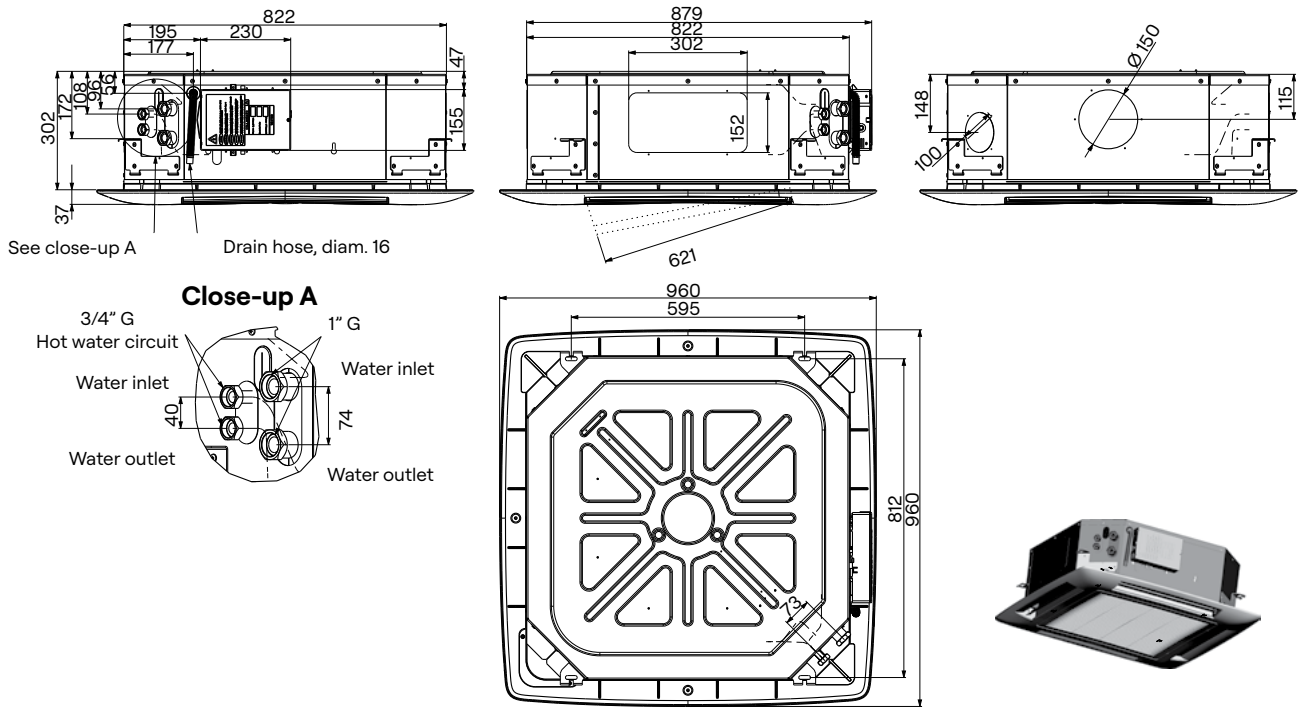

Dimensions, mm

42GW 500/509 - 600/609 - 701/709 (big chassis)

Unit with 2-way valve

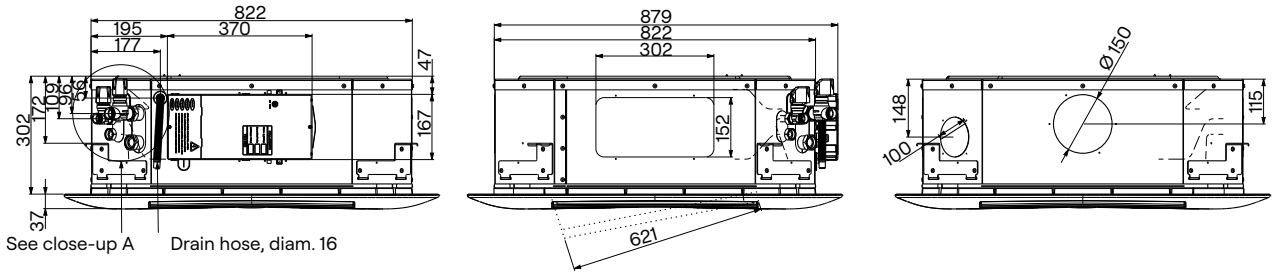

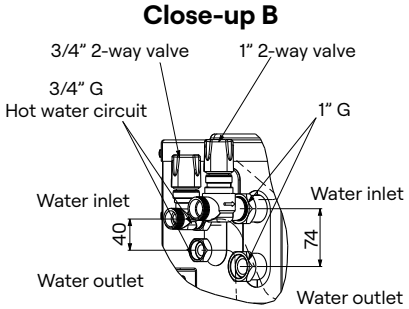

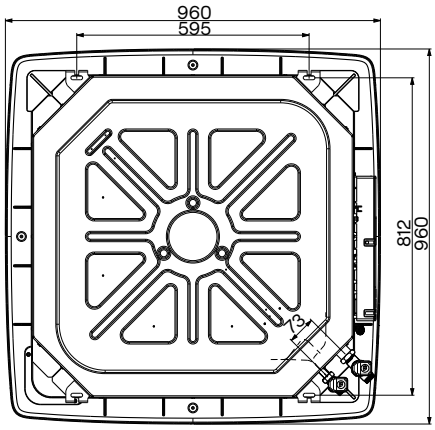

Unit with 4-way valve

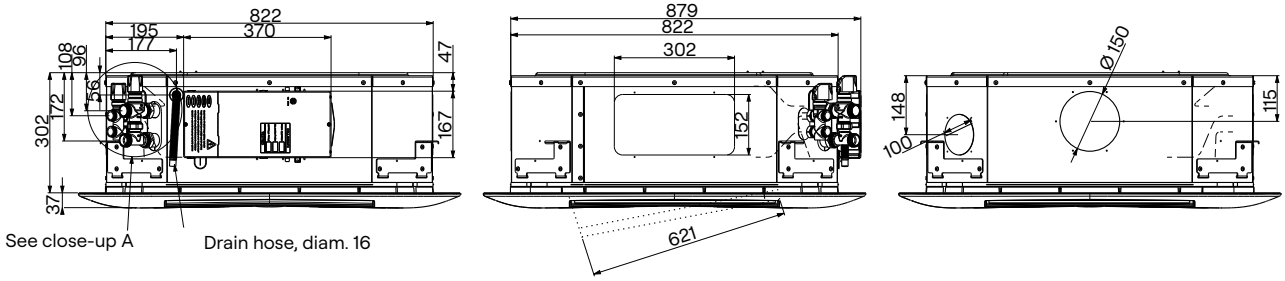

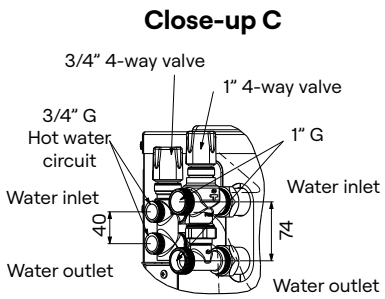

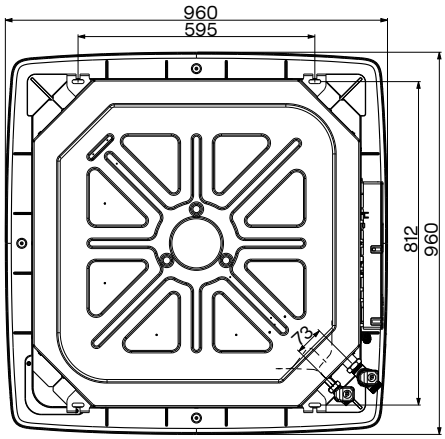

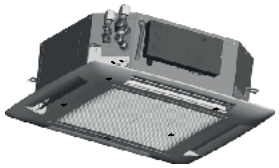

Coil water capacity

42GW		200/209	300/309	400/409	500/509	600/609	701/709
Coil volume	l	0,55	1,1	1,1	1,6	2,4	2,4

Air stream, in metres

42GW	All louvres open			One louvre closed			Two louvres closed		
	High speed	Medium speed	Low speed	High speed	Medium speed	Low speed	High speed	Medium speed	Low speed
200/209	3,8	3,2	2,7	4,3	3,7	3,0	4,8	4,1	3,4
300/309	4,0	3,4	2,8	4,5	3,8	3,2	5,0	4,3	3,5
400/409	4,8	4,1	3,4	5,3	4,5	3,7	5,8	4,9	4,1
500/509	3,0	2,6	2,1	3,5	3,0	2,5	4,0	3,4	2,8
600/609	3,4	2,9	2,4	3,9	3,3	2,7	4,4	3,7	3,1
701/709	4,3	3,7	3,0	4,8	4,1	3,4	5,3	4,5	3,7

NOTES:
1. **The louvres were set so as to use the Coanda effect to obtain an air flow model parallel to the ceiling, and adhering to it as much as possible.**
2. **The air discharge is defined as the distance between the point where the air flow emerges from the unit parallel to the ceiling, and the point where its speed drops to 0.2 m/s.**
3. **These values are supplied as a guide; they may vary according to the ceiling type, the room dimensions and even its furniture.**

Operating limits

Water circuit	Maximum water side pressure: 1600 kPa (160 m WG)	Minimum entering water temperature: 5°C Maximum entering water temperature: 80°C
Indoor temperature	-	Minimum temperature: 5°C Maximum temperature: 32°C in heating mode with electric heating device
Power supply	Nominal voltage Operating limits	230 V - 1 ph - 50/60 Hz Min. 207 V - max. 253 V - units without electric heating device Min. 216 V - max. 244 V - units with electric heating device

Valve kit

Valve kit	42GW 9029	42GW 9031	42GW 9030	42GW 9032	42GW 9033	42GW 9035	42GW 9034	42GW 9036
Unit option (10th letter)	H - 4-way	H - 4-way	H - 4-way	H - 4-way	G - 2-way	G - 2-way	G - 2-way	G - 2-way
Description	②	①	② + ③	① + ④	②	①	② + ③	① + ④
Valve centre-to-centre, mm	40	73	40/40	73/40	40	73	40/40	73/40
Valve gasket coupling type	Flat	Flat	Flat	Flat	Flat	Flat	Flat	Flat
2-pipe								
200C, 300C, 400C	x				x			
209C, 309C, 409C	x				x			
500C, 600C, 701C		x				x		
509C, 609C, 709C		x				x		
4-pipe								
200D, 300D, 400D			x				x	
209D, 309D, 409D			x				x	
600D, 701D				x				x
609D, 709D				x				x

① 1" cooling
② 3/4" cooling
③ 1/2" heating
④ 3/4" heating