42N 42NC-42NR 42ND 42NI -42NU

IDROFAN®

Total cooling capacity:
0,7– 8,7kW

Nominal heating capacity:
1,0– 9,15kW

- Versatile unit meeting all building-specific constraints
- Energy and ecodesign performance.
- Improved occupant comfort, very low sound level
- Innovative design ensuring easy installation and simplified maintenance

EUROVENT CERTIFIED PERFORMANCE
www.eurovent-certification.com

CARRIER participates in the ECP programme for LCP-HP. Check ongoing validity of certificate: www.eurovent-certification.com

Product Selection Data

Designed for heating and cooling, the 42N is available in 2 models (cased or uncased).

The versatility of the new 42N, thanks to its different assembly options and range of accessories, means it can be adapted to any type of installation.

In Europe, it has become a benchmark solution for renovations of large office blocks and hotel chains and restoration of buildings, etc.

Modern aesthetic lines, excellent sound levels and optimised thermal performance. With its new 42N range, CARRIER offers a comfort solution which is both economical and quick to set up.

Translation of the original document

Carrier

Technical description

Casing

- Single-unit casing and side members in ABS.
- Front/rear panel in galvanised steel with mounting holes for easy fixing.

Casing for cabinet model

Bi-material casing in two colours:

- Flange, side member and supply air grille in RAL 7035 grey ABS.
- Front pressed metal panel painted RAL 9010 white and front mounted return air grille (42NR) in RAL 7035 grey.
- Central access point for housing 33TZ thermostat.

Water coil

- High performance coil concept.
- Coil casing in galvanised panels.
- Copper pipes, aluminium louvre or non-louvre fins, patented.
- Water coil tap on the left or right of the unit from the front of the supply air (to be specified when ordering).
- 2 or 4-pipe main coil fitted with ½" or ¾" rotary couplings with air purge and drain screw.
- Additional coil for 4 pipes fitted with .½" rotary couplings with 40 mm centre-to-centre distance.
- Nominal pressure of 16 bar (at 20°C).
- Test pressure 18 bar.
- Maximum hot water inlet temperature:
  - 4-pipe application: 90°C.
  - 2-pipe application: 90°C.
  - 2-pipe/2-wire application: 55°C (min. air flow: 200 m^3/h).

Electric heater

- Single pipe 230V single phase 50/60 Hz electrical elements inserted into the aluminium housing.
- Two capillary tube temperature limiters with manual and automatic reset inserted in the aluminium housing.

Condensate drain pan

- Pan in ABS PC 10% fibreglass with M1 class reinforced EPS insulation (20 mm thick).
- Reinforced insulation for all climates, M1 class EPS panel (20 mm thick).
- Auxiliary drain pan in ABS.
- 22 mm external Ø raised condensate outlet.

Fan motor assembly

- Fan(s).

Impeller(s) in ABS in split units for total accessibility of the different parts of the fan motor assembly.

160 mm impeller(s), with exclusive airfoil blades in self-extinguishable HB ABS.

- EC motor.

High energy efficiency motor enabling a reduction of up to 85% in electricity consumption:

- Brushless technology.
- Sealed type, tropicalised with protected shaft.
- Progressive control with 0-10V control signal.
- Internal normally closed series automatic overload protection on the windings.
- Mounted on anti-vibration mounts.
- Supply 230V±10%/1-Ph/50-60 Hz.

NOTE: The minimum voltage to start up the motor is 2V.

- Asynchronous motor:
  - 5 factory-fitted wired speeds (connected and available at the terminal) for customised adjustment.
  - Sealed, tropicalised type, class F with protected shaft.
  - Permanent capacitor.
  - Ball bearings.
  - Automatic overload protection as standard on winding.
  - Resilient mounts.
  - 230V single-phase 50/60 Hz power supply, reduced consumption.
  - 3-speed asynchronous motor available on sizes 2 and 3.

Technical description

Electrics box

- Box incorporated on the side of the base opposite the hydraulics.
- Fully encased in an enclosure in PP 20% Talc.
- Electrical connection terminal on DIN rail in compliance with EN 50022, 7,5 mm deep.
- Wire clamps for customer connection.

Air filter

- Flexible filter medium made of regenerative polyester fibre, on rigid frame.
- Efficiency class EN 779: G3.
- Fire rating: M1.
- Mounted on pivoting runners for easy maintenance.

Packaging

- Delivered in individual boxes on pallets protected by stretch wrap film.

Controls

- Electronic thermostat : 33TZ (built-in thermostat for vertical model with casing & 33ET A/B/C/D & 33TT (availble in wall mounted only).
- Networked electronic range (CCN): NTC.
- Networked electronic range (BacNET): WTC.

Factory-fitted options

- Condensate drain pump.
- Rectangular supply air sleeve for direct distribution in soffit.
- Supply and return air plenum : in line for model 42NI and lateral U for model 42NU for sizes 2 to 4.
- 3-speed EC motor for subsequent integration (on-site - not factory-fitted) of a 33TZ thermostat or for operation with a thermostat or a 3-speed control.

Accessories supplied separately

- Support feet or base.
- Return air grille between feet.
- Rear skirting support and rear painted panel.
- Single- or dual-deflection diffusion grille.
- Supply air plenum in kit for sizes 1 to 6 diameter 200 mm or 160 mm for sizes 1 to 5.
- Resilients mounts (lot of 4 pcs).

NOTE: refer to the technical manual and the instruction manual for more information.

Option available on request (please contact us)

- Upon special request (to be specified when ordering), the heat exchanger can be supplied with fins protected against aggressive or corrosive atmospheres.

Assembly and dimensions – cabinet model (vertical application)

42NR: Unit with return on front

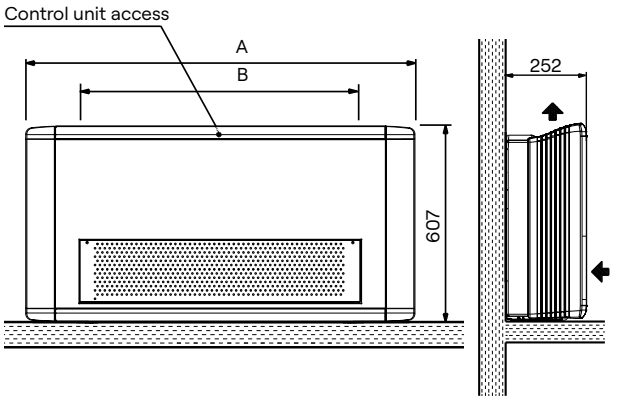

42NC: Basic unit with return underneath

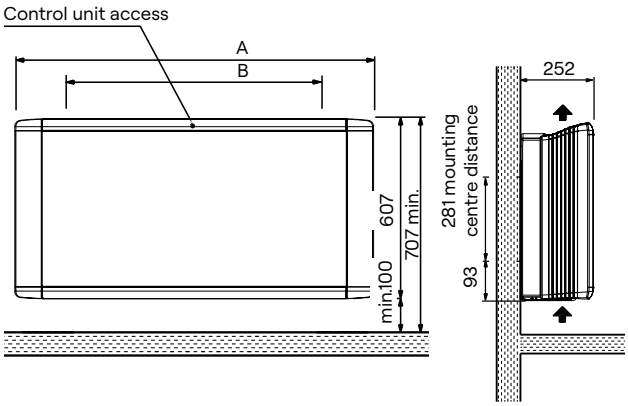

42NC + feet: Basic unit with feet

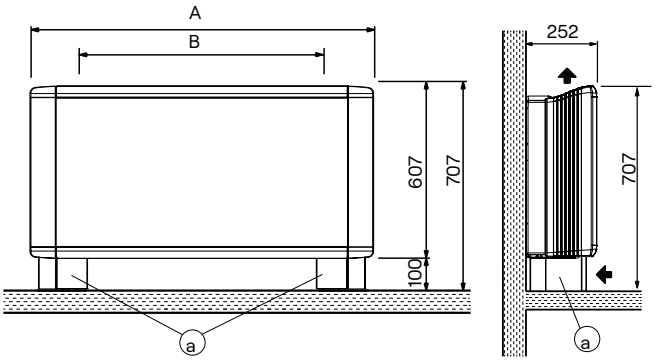

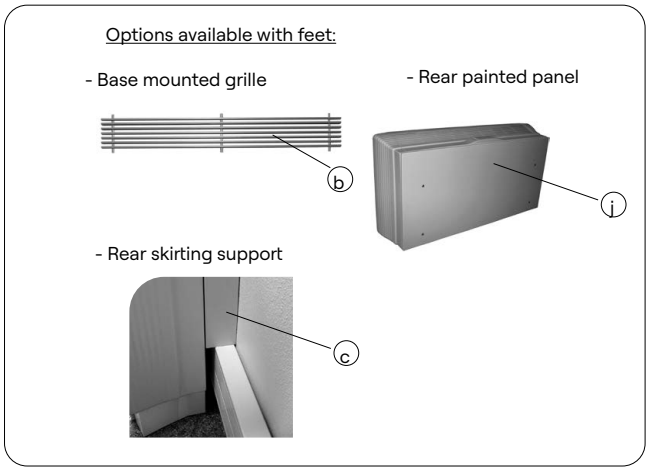

Accessories for assembly configurations (supplied separately)

a : Support feet
b : Aluminium return air grille between feet
c : Painted rear skirting support
j : Rear painted panel RAL 7035

Sizes	A	B mounting centre distance	Weight (kg)①
1	840	505	20
2	1000	665	23
3	1200	865	28
4	1400	1065	34
5	1600	1265	39
6	1800	1465	44

① Weight of the unit in 4-pipe version (without valves)

Assembly and dimensions – cabinet model (horizontal application)

42NR: Unit with return on front

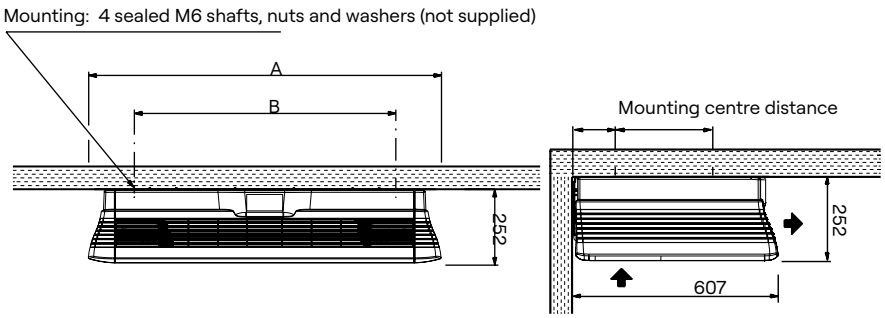

42NC: Basic unit

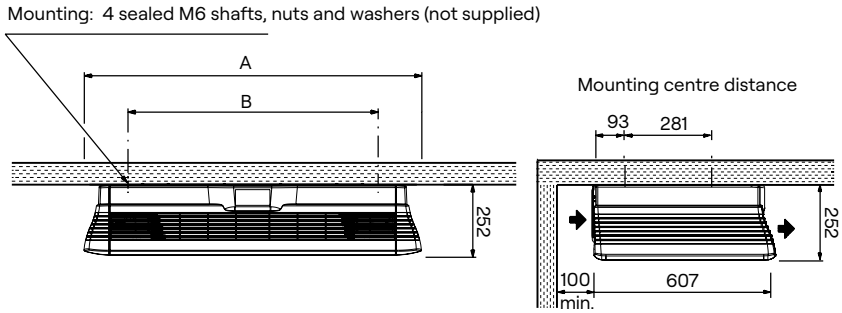

42NC + feet: Basic unit with feet

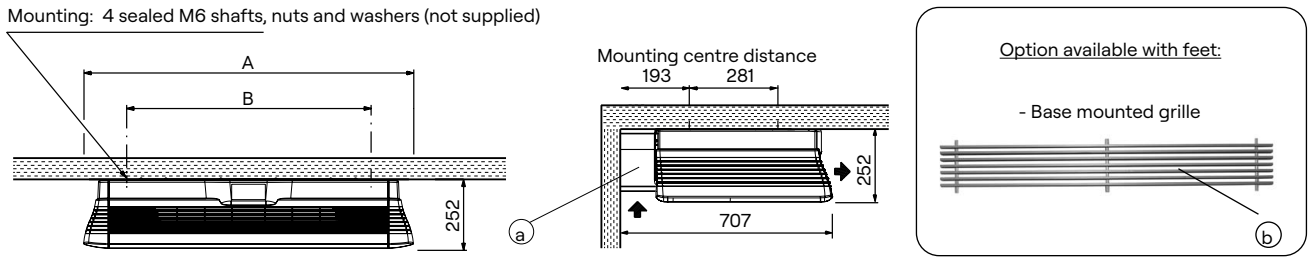

Accessories for assembly configurations (supplied separately)

a : Support feet

b : Aluminium internal return air grille between feet

NOTE: with feet the condensate drain pump must be used.

Sizes	A	B mounting centre distance	Weight (kg)①
1	840	505	20
2	1000	665	23
3	1200	865	28
4	1400	1065	34
5	1600	1265	39
6	1800	1465	44

① Weight of heaviest unit in 4-pipe configuration

Assembly and dimensions – concealed model (vertical application)

42ND: Basic unit with bottom-mounted return

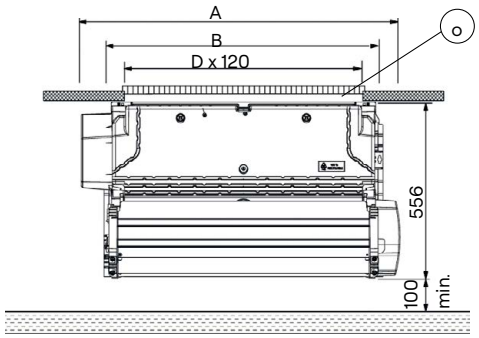

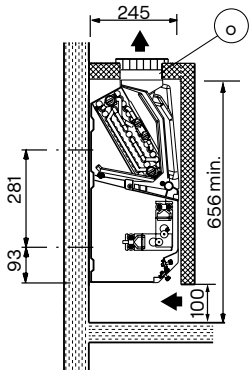

42ND + support: Basic unit with support base

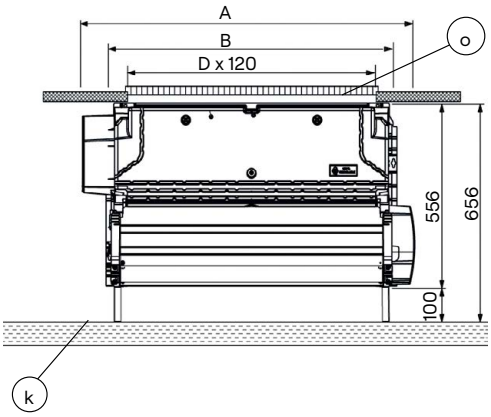

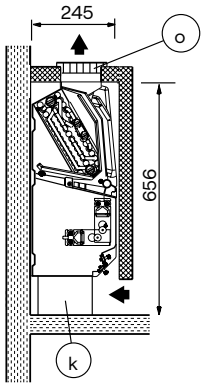

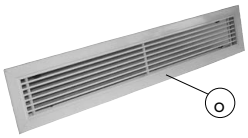

Accessories for assembly configurations (supplied separately)

k : Support base

o : Aluminium single deflection diffusion or return air grille with sealing frame (without hatch).

NOTE: this grille can be used for both return and supply air.

Sizes	A	B mounting centre distance	D grille space	Weight (kg ①
1	652	505	355	15
2	812	665	515	18
3	1012	865	715	22
4	1212	1065	915	28
5	1412	1265	1115	32
6	1612	1465	1315	36

① Weight of the unit in 4-pipe version (without valves)

Assembly and dimensions – horizontal concealed model

42ND: Unit with return on front

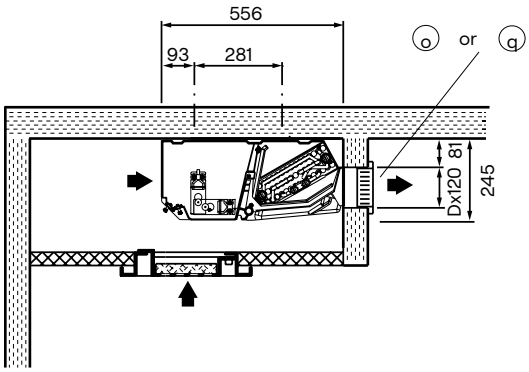

View from beneath

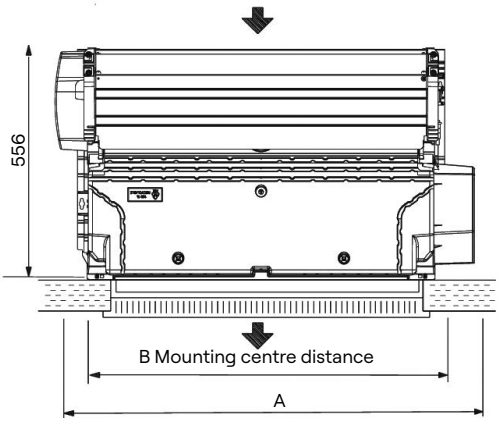

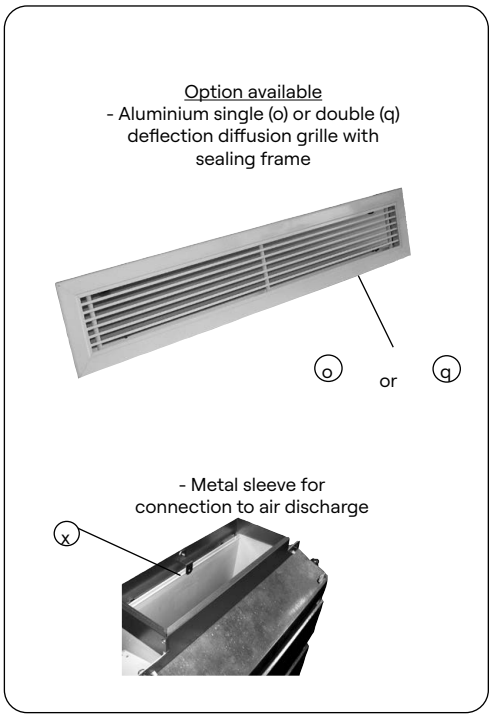

Accessories for assembly configurations (supplied separately)

o : Aluminium single deflection diffusion grille with sealing frame.
q : Aluminium double deflection diffusion grille with sealing frame
x : Metal sleeve connecting rectangular sleeve to supply air

Size	A	B mounting centre distance	D grille space	Weight (kg) ①
1	652	505	355	15
2	812	665	515	18
3	1012	865	715	22
4	1212	1065	915	28
5	1412	1265	1115	32
6	1612	1465	1315	36

① Weight of the unit in 4-pipe version (without valves)

Assembly and dimensions – horizontal concealed model

42ND + kit supply plenum Ø 200 mm:

Supply air plenum delivered not fitted. Available for sizes 1 to 6.

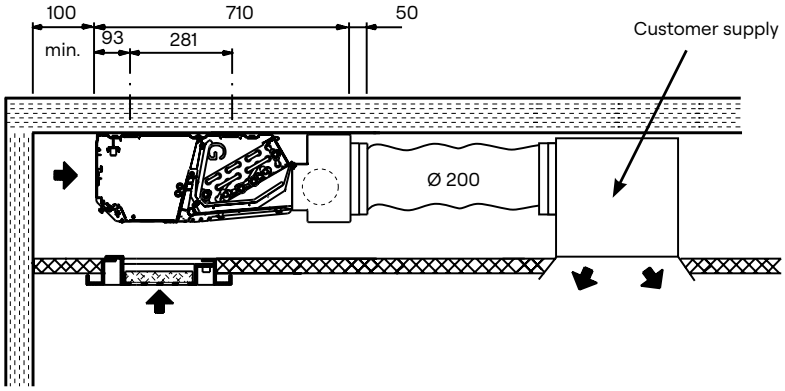

Size	Number of collars	Ø of collars
1	1	200
2	1	200
3	2	200
4	3	200
5	3	200
6	3	200

42ND + kit supply plenum Ø 160 mm:

Supply air plenum delivered not fitted. Available for sizes 1 to 5.

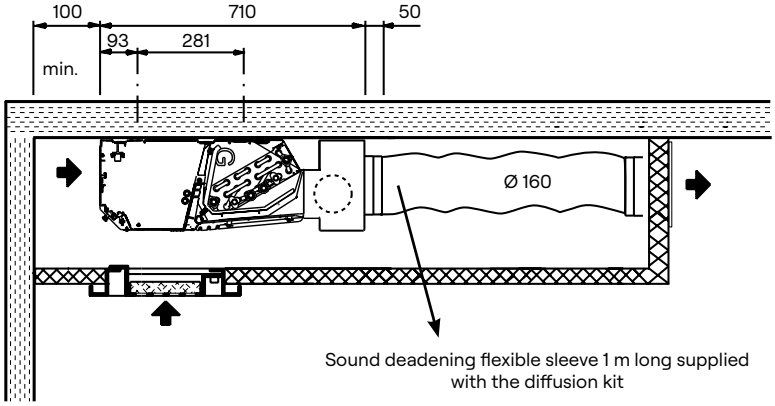

Size	Number of collars	Ø of collars
1	1	160
2	1	160
3	2	160
4	3	160
5	3	160

Assembly and dimensions – horizontal concealed model

42NI :

Supply and return air plenum factory-fitted with Ø 200 mm spigots available for sizes 2 to 4.

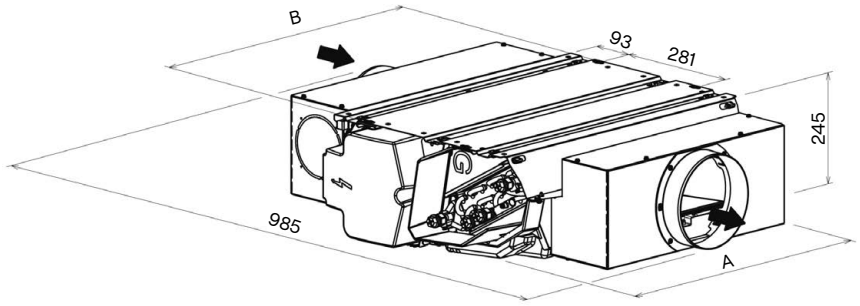

Size	A	B	Number of collars
2	760	665	1
3	960	865	2
4	1160	1065	3

42NU:

Supply and return air plenum factory-fitted with Ø 200 mm spigots available for sizes 2 to 4.

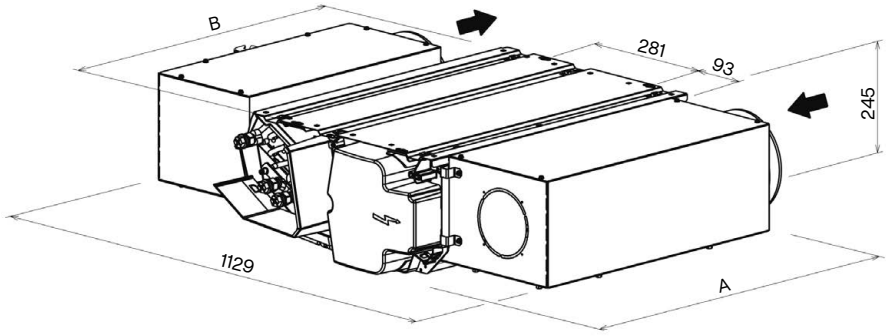

Size	A	B	Number of collars
2	770	665	1
3	970	865	1
4	1170	1065	1

Performance – 2-pipes system

Eurovent conditions

Cooling mode: water temperature: 7/12 °C, inlet air temperature: 27 °C - 19 °C (WB).
Heating operation: water temperature: 45/40 °C, inlet air temperature: 20 °C.

Sizes	AC motor Motor speed	EC motor Voltage (V)	Air Flow (m^3/h)	Cooling cap. W		Heating capacity W	Sound power LW dB(A)	Electric consumption W		Electric heater	
				Total	Sensible			AC Motor	EC Motor	Low capacity W	High capacity W
42N-115F/G 42N-119F/G	V4	4,6	265	1 040	990	1 530	46	24	10	300	600
	V3	3,9	225	880	830	1 360	41	19	6		
	V1	2,8	165	710	660	1 030	33	12	5		
42N-135F/G 42N-139F/G	V4	5	265	1 390	1 130	1 880	46	25	11	300	600
	V3	4,2	225	1 200	970	1 600	42	19	8		
	V1	2,9	165	850	670	1 160	36	11	5		
42N-215F/G 42N-219F/G	V4	4,8	415	1 760	1 690	2 500	50	42	15	500	1000
	V3	4,3	370	1 620	1 540	2 330	47	40	12		
	V1	2,7	230	1 150	1 050	1 550	36	33	5		
42N-235F/G 42N-239F/G	V4	4,8	410	2 140	1 800	2 690	50	42	15	500	1000
	V3	4,3	365	1 910	1 640	2 430	46	40	12		
	V1	2,7	225	1 320	1 120	1 670	35	33	5		
42N-236F/G	V3	-	788	4 170	3 310	4 980	65	98	-	500	1000
	V2	-	532	3 190	2 440	3 650	57	82	-		
	V1	-	367	2 420	1 800	2 670	47	59	-		
42N-245F/G 42N-249F/G	V4	4,8	410	2 160	1 630	2 550	50	42	15		
	V3	4,3	365	1 950	1 470	2 280	47	40	12		
	V1	2,7	225	1 310	950	1 500	36	33	5		
42N-315F/G 42N-319F/G	V4	5,3	645	2 720	2 150	3 410	53	53	26	800	1600
	V3	4,4	535	2 390	1 870	2 960	47	47	17		
	V1	2,2	230	1 380	1 030	1 670	29	36	4		
42N-325F/G 42N-329F/G	V4	5,3	645	3 160	2 620	3 840	53	53	26		
	V3	4,4	535	2 760	2 250	3 180	47	47	17		
	V1	2,2	230	1 300	1 080	1 680	29	36	4		
42N-335F/G 42N-339F/G	V4	5,3	620	3 510	2 700	4 280	53	53	26	800	1600
	V3	4,4	505	3 050	2 340	3 590	47	47	17		
	V1	2,2	220	1 370	1 060	1 690	29	36	4		
42N-336F/G	V3	-	1062	5 210	4 230	6 410	64	117	-	800	1600
	V2	-	777	4 250	3 350	5 040	57	91	-		
	V1	-	558	3 360	2 580	3 840	49	66	-		
42N-435F/G 42N-439F/G	V4	6,8	1030	5 750	4 480	6 310	60	102	59	1200	2400
	V3	5,4	805	4 740	3 590	5 150	55	87	31		
	V1	3,2	445	2 910	2 160	3 170	41	68	10		
42N-535F/G 42N-539F/G	V4	7,1	1120	6 030	4 740	6 950	60	94	60	1600	3200
	V3	5,8	910	5 240	4 020	5 740	55	80	35		
	V1	3,6	535	3 370	2 570	3 660	42	64	11		
42N-645F/G 42N-649F/G	V4	7,8	1350	7 990	5 970	8 590	63	122	87		
	V3	7,1	1210	7 420	5 550	7 870	61	118	65		
	V1	4,4	730	5 070	3 770	5 230	49	105	18		

IMPORTANT: the air supply temperature should not exceed 65°C (CARRIER recommendation).

CARRIER participates in the ECP program for Fan Coil Units :

The certified values are : Input voltage for variable speed units only, Total cooling Capacity, Sensible Capacity, Total heating capacity, Water Pressure Drop, Electric Motor Consumption, Lw (inlet+radiated) and Lw (outlet) for ducted units, Lw (overall) for non-ducted units and Air Flow Rate and External Static Pressure for ducted units only .

Performance – 4 pipes system

Eurovent conditions

Cooling operation: water temperature: 7/12°C, inlet air temperature: 27°C - 19°C (WB).
Heating operation: water temperature: 65/55°C, inlet air temperature: 20°C.

Sizes	AC motor Motor speed	EC motor Voltage (V)	Air Flow (m^3/h)	Cooling cap. W		Heating capacity W	Sound power LW dB(A)	Electric consumption W	
				Total	Sensible			AC Motor	EC Motor
42N-135C/D 42N-139C/D	V4	5,0	260	1 390	1 130	1 130	46	25	11
	V3	4,2	215	1 200	970	1 030	42	19	8
	V1	2,9	140	850	670	850	36	11	5
42N-235C/D 42N-239C/D	V4	4,8	410	2 130	1 850	1 860	50	42	15
	V3	4,3	365	1 940	1 660	1 760	46	40	12
	V1	2,7	225	1 320	1 120	1 390	35	33	5
42N-236C/D	V3	-	788	3 900	3 200	2 500	65	98	-
	V2	-	532	3 000	2 300	2 000	57	82	-
	V1	-	367	2 200	1 700	1 400	47	59	-
42N-245C/D 42N-249C/D	V4	4,8	410	1 910	1 740	3 420	50	42	15
	V3	4,3	365	1 720	1 560	3 250	46	40	12
	V1	2,7	225	1 200	1 090	2 470	35	33	5
42N-335C/D 42N-339C/D	V4	5,3	620	3 310	2 690	2 980	53	53	26
	V3	4,4	505	2 790	2 280	2 650	47	47	17
	V1	2,2	220	1 200	1 040	1 540	29	36	4
42N-336C/D	V3	-	1062	5 210	4 000	6 100	64	117	-
	V2	-	777	4 700	3 700	5 200	57	91	-
	V1	-	558	3 800	3 100	4 200	49	66	-
42N-345C/D 42N-349C/D	V4	5,3	620	2 930	2 390	4 730	53	53	26
	V3	4,4	505	2 550	2 040	4 150	47	47	17
	V1	2,2	220	1 180	960	2 130	29	36	4
42N-435C/D 42N-439C/D	V4	6,8	1030	5 480	4 300	4 110	60	102	59
	V3	5,4	805	4 650	3 570	3 600	55	87	31
	V1	3,2	445	2 940	2 190	2 610	41	68	10
42N-445C/D 42N-449C/D	V4	6,8	1030	4 910	4 080	5 720	60	102	59
	V3	5,4	805	4 150	3 380	4 990	55	87	31
	V1	3,2	445	2 650	2 070	3 600	41	68	10
42N-535C/D 42N-539C/D	V4	7,1	1120	5 880	4 810	5 770	60	94	60
	V3	5,8	910	4 980	4 070	5 090	55	80	35
	V1	3,6	535	3 330	2 590	3 790	42	64	11
42N-635C/D 42N-639C/D	V4	7,8	1250	8 150	6 040	9 150	64	120	82
	V3	7,1	1120	7 460	5 550	8 160	62	117	61
	V1	4,5	680	4 960	3 670	6 270	50	105	19

CARRIER participates in the ECP program for Fan Coil Units :

The certified values are : Input voltage for variable speed units only, Total cooling Capacity, Sensible Capacity, Total heating capacity, Water Pressure Drop, Electric Motor Consumption, Lw (inlet+radiated) and Lw (outlet) for ducted units, Lw (overall) for non-ducted units and Air Flow Rate and External Static Pressure for ducted units only .

Technical characteristics

Coil capacity (litres)

		115/119	135/139	215/219	235/239	245/249	315/319	325/329	335/339	435/439	535/539	645/649
2-pipe system	Hot or cold water coil	0,23	0,33	0,30	0,45	0,53	0,40	0,47	0,63	0,84	1,03	1,33

		135/139	235/239	245/249	335/339	345/349	435/439	445/449	535/539	635/639
4-pipe system	Cold water coil	0,33	0,45	0,36	0,60	0,52	0,71	0,72	1,11	1,32
	Hot water coil	0,075	0,098	0,19	0,13	0,21	0,22	0,24	0,274	0,47

Coil connection diameters

- Coil connection type: rotary couplings with flat face;
- Valve connection type: install flush fit male threaded unions.

		115/119	135/139	215/219	235/239	245/249	315/319	325/329	335/339	435/439	535/539	645/649
2-pipe system	Hot or cold water coil	G1/2"	G1/2"	G1/2"	G1/2"	G1/2"	G1/2"	G1/2"	G1/2"	G1/2"	G3/4"	G3/4"

		135/139	235/239	245/249	335/339	345/349	435/439	445/449	535/539	635/639
4-pipe system	Cold water coil	G1/2"	G1/2"	G1/2"	G1/2"	G1/2"	G1/2"	G3/4"	G3/4"	G3/4"
	Hot water coil	G1/2"	G1/2"	G1/2"	G1/2"	G1/2"	G1/2"	G1/2"	G1/2"	G1/2"

Motor specifications

	Motor speed	AC Motor Asynchronous (230V/50Hz)								EC Motor Brushless (230V/50Hz)					
		115/ 135	215/ 235/ 245	236	315/ 325/ 335/ 345	336	435/ 445	535/ 545	635/ 645	119/ 139	219/ 239/ 249	319/ 329/ 339/ 349	439/ 449	539	639/ 649
Power input during operation (W)	**V5**	33	58	-	88	-	106	108	135	11	25	32	77	90	100
	V4	31	41	-	67	-	93	94	114	9	15	22	63	80	75
	V3	29	36	98	52	117	80	79	99	6	11	13	36	42	55
	V2	27	31	82	42	91	72	72	88	5	8	7	21	26	32
	V1	26	27	59	35	66	63	63	77	4	5	3	11	13	16
Max. absorbed current (A)	**V5**	0,14	0,25	-	0,38	-	0,46	0,47	0,59	0,11	0,2	0,29	0,62	0,71	0,74
	V4	0,13	0,18	-	0,29	-	0,4	0,41	0,5	0,09	0,13	0,2	50	0,62	0,67
	V3	0,13	0,16	0,42	0,23	0,5	0,35	0,34	0,43	0,07	0,11	0,13	0,3	0,35	0,44
	V2	0,12	0,13	0,35	0,18	0,39	0,31	0,31	0,38	0,06	0,09	0,08	0,19	0,21	0,27
	V1	0,11	0,12	0,26	0,15	0,28	0,27	0,27	0,33	0,06	0,06	0,06	0,11	0,13	0,16

NOTE:
Specifications determined for 230V +/-10% - 50Hz supply.
For operation at 60 Hz, the power input and rotation speed values are generally higher. Motor operating range:
Minimum return T°C: 0°C,
Maximum return T°: 40°C

Technical characteristics

Unit information plate

The information plate shows all the information needed to identify the unit and its configuration. This plate is located on the condensate pan, on the electrical connection side.

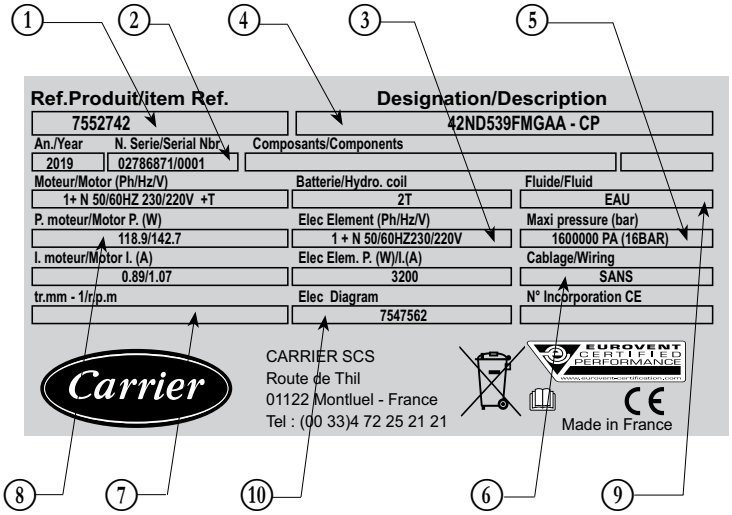

1. Code
2. Serial number
3. Description of the unit
4. Nominal motor output
5. Motor rotation speed
6. Coil type
7. Wiring diagram reference
8. Motor speed wiring
9. Maximum operating pressure
10. Electrical heater specifications (if fitted)

Options (factory fitted)

42NC/42NR	42ND/42NI/42NU	Figures	Digit number	Description
•	•		14	Condensate drain pump fitted to unit with high safety device.
	•		13	Metal sleeve for connection to air discharge

Factory accessories (delivered separately)

Figures	Description		Size 1	Size 2	Size 3	Size 4	Size 5	Size 6
	Support feet for cased model	Code	7652779					
	Internal return air grille between feet	Code	7242935	7242936	7242937	7242938	7242939	7242940
	Rear skirting support in RAL7035 light grey, 55 mm thick (for 70 mm skirting)	Code	7242926	7242927	7242928	7242929	7242930	7242931
	Rear painted panel in RAL7035 light grey for positioning the unit by a window	Code	7262703	7262704	7262705	7262706	7262707	7262708
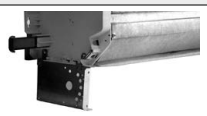	Support base for Concealed unit	Code	7652780					
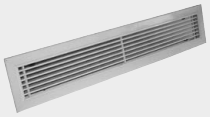	Single deflection diffusion grille with sealing frame for vertical and horizontal Concealed models	Code	7256897	7256898	7256899	7256900	7256901	7256902
	Double deflection diffusion grille with sealing frame for horizontal Concealed models	Code	7242942	7242943	7242944	7242945	7242946	7242947
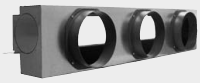	Supply plenum with Spigots Ø 200 mm	Code	7512282	7512284	7512286	7512288	7242995	7242996
	Supply air plenum with Spigots Ø 160 mm	Code	7512283	7512285	7512287	7512289	7243490	
	Resilient mounts supplied separately (4 per unit)	Code	0219453					