42NX

Ductable fan coil unit

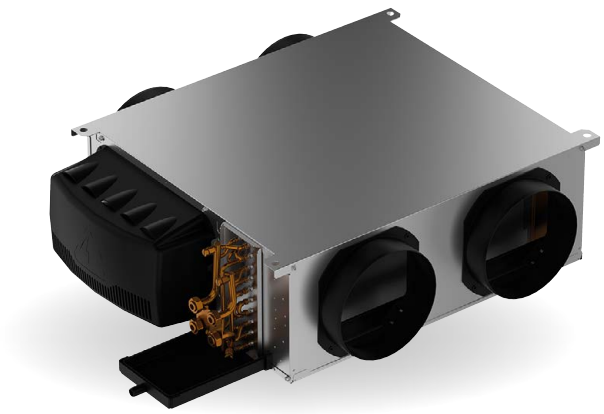

IDROFAN®

Cooling capacity:
0.6 kW – 11 kW

Heating capacity:
0.8 kW - 14 kW

- Ductable unit for suspended ceiling and raised floor
- Extremely quiet operation
- Low energy consumption
- Flexibility for simplified installation
- Improved comfort
- Indoor air quality

EUROVENT CERTIFIED PERFORMANCE
www.eurovent-certification.com

CARRIER participates in the ECP programme for LCP-HP Check ongoing validity of certificate: www.eurovent-certification.com

Product Selection Data

Carrier 42NX units are available in different sizes with 2-pipe, 2-pipe plus electric heater or 4-pipe coils, with an airflow range from 140 to 1900 m^3/h, a total cooling capacity range from 0.6 kW to 11 kW, and a rated heating capacity range from 0.8 kW to 14 kW.

Translation of the original document

Carrier

Description and applications

The 42NX terminal unit is a ductable unit specially designed to be compact and modular for installation in any suspended ceiling or raised floor, thanks in particular to its low height, which is 229 mm - 279 mm in the largest size.

Reliable, economical and quiet, it is ideal for commercial buildings, hotels, guest houses, offices, and light commercial applications.

With its variable-speed EC motor and high-pressure centrifugal fan, this unit will provide optimal operation while ensuring low energy consumption. An ISO coarse 50% filter is fitted as standard to ensure good air quality. The electrical heater is secure and factory-fitted with a choice of capacity levels to suit your needs. The valves are factory-fitted to ensure low hydraulic pressure drops.

The 42NX ductable terminal unit offers a wide choice of factory-fitted options (valves, controllers, etc.) for quick and easy on-site installation. The 42NX terminal unit is highly modular, as each size can be provided with:

- Non-ducted return and/or direct air supply.
- A rectangular sleeve on the return air and/or supply air (ideal for connecting the fan coil unit to the air duct).
- Return air and/or supply air plenums with different diameters: 160, 200 or 250 mm, depending on the size of the unit.

The figure below shows all the available plenum configurations.

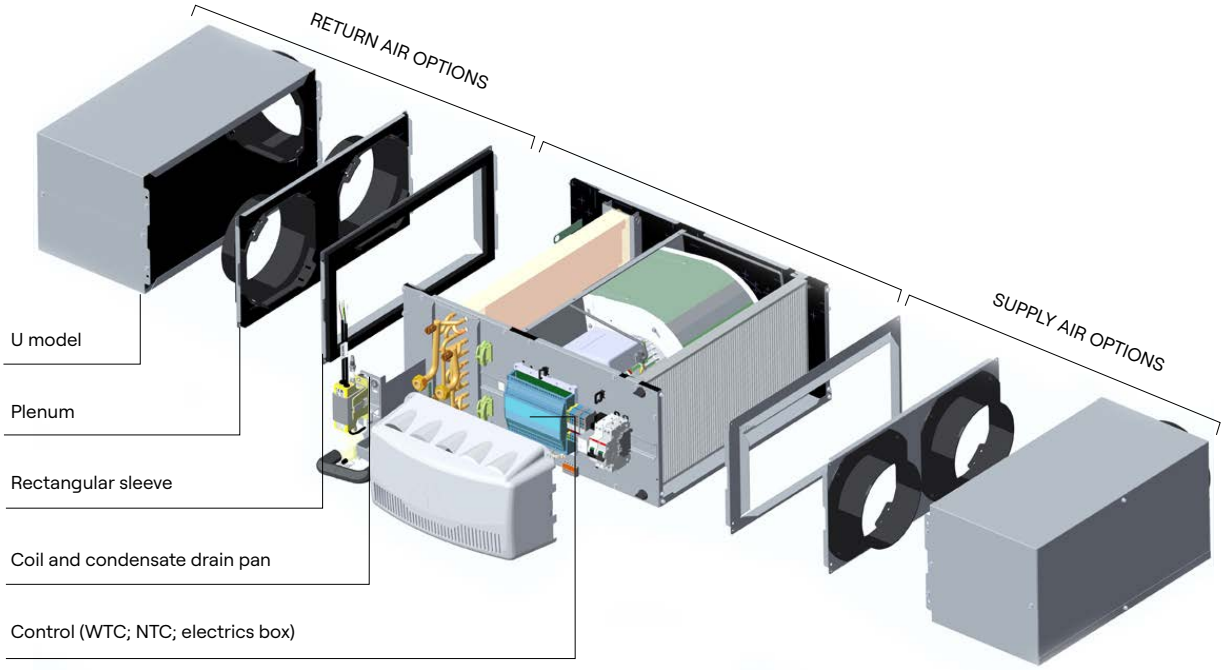

Customer benefits

Industry standard

The 42NX range has been developed and designed in France to ensure its robustness and high-quality design, making full use of the company's experience in the field, and its performance has been validated by the Eurovent certification. With an installed base of more than a million units, the Idrofan range has become the standard in the fan coil unit market.

1,000,000
Units installed

Energy efficiency

The high static pressure of the 42NX complies with the Eurovent FCP certification specific to ductable fan coil units and, in particular, the limitation of pressure drops. The low energy consumption (LEC) brushless EC motor reduces the energy consumption of the fan coil unit by up to 50% compared to an AC motor, making it easier to comply with new building energy management regulations.

Energy savings

Versatile

The 42NX range offers a high external static pressure capacity and is available in a wide choice of plenums and connection diameters. It has been designed to adapt to all room sizes and configurations, whether for applications in hotels, offices, shops or restaurants. It meets customer requirements for heating and cooling capacity (from 0.6 to 11 kW). With an ISO coarse 50% filter fitted as standard and an ePM10 filter available for higher filtration quality, the 42NX range is the ideal solution for ensuring excellent indoor air quality.

Adaptability

Quiet solution

With its sound insulation and ultra-low-noise fan motor, the 42NX range ensures very quiet operation. Its low energy consumption (LEC) motor with variable fan speed control ensures greater sound comfort than a multi-speed motor, as the air flow rate automatically adjusts from 0 to 100% to perfectly meets occupants' needs. With a Carrier Water Terminal Controller (WTC), the maximum fan speed can also be limited to further improve sound level management.

Quiet

Maintenance

The 42NX units are designed for easy installation in suspended ceilings or raised floors in various settings like hotels, offices, shops, and restaurants. These units provide direct access to the air filter, water coil, condensate drain pan and fan motor assembly, making maintenance and compliance with local hygiene regulations easier.

Maintenance

Range configuration

Several installation configurations are available to meet all on-site requirements.

I model

- with or without a rectangular connection sleeve on the supply air and/or return air.

H model

- Plenum on the return air and supply air with spigot for connection to round ducts.
- Number and diameter of spigots according to the table on the following page.

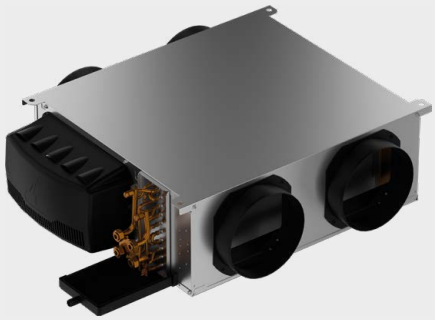

U model

- Plenum on the return air and the supply air with a lateral spigot (diameter 160 or 200 or 250 mm).

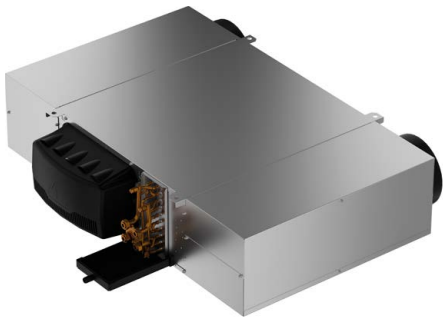

Compact U model

- Lateral spigot installed directly on the unit for the return air.
- Supply plenum with lateral spigot.
- Model not available on size 5.

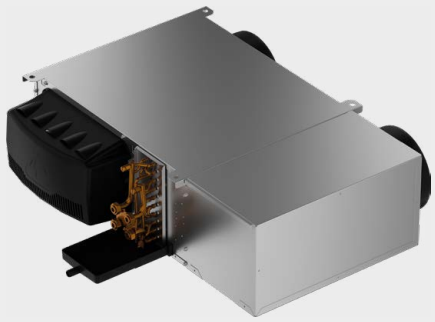

Y model

- Plenum on the supply air and return air with spigots for connection to a round duct.
- Number and diameter of spigots according to the table on the following page.
- Rectangular connection sleeve available for the return air.

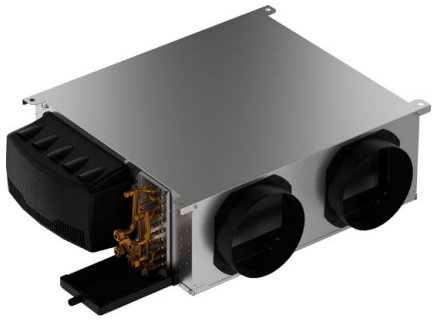

Range configuration

Plenum available depending on the configuration.

	Size T1	Size T2	Size T3	Size T4	Size T5
H or Y model	1x DN 160	1x DN 160	2x DN 160	3x DN 160	3x DN 200
	-	2x DN 160	2x DN 200	3x DN 200	3x DN 250
	1x DN 200	1x DN 200	1x DN 200	2x DN 200	4x DN 200
	-	2x DN 200	-	-	4x DN 250
U model	1x DN 160	1x DN 160	1x DN 160	-	-
	1x DN 200	1x DN 200	1x DN 200	1x DN 200	-
	-	-	-	-	1x DN 250
U-series - Fresh air options	1x DN 160	1x DN 160	1x DN 160	-	-
Fresh air spigot DN 100 - 125	1x DN 200	1x DN 200	1x DN 200	1x DN 200	-
	-	-	-	-	1x DN 250
Compact U model	1x DN 160	1x DN 160	1x DN 160	-	-
	1x DN 200	1x DN 200	1x DN 200	1x DN 200	-

Main modules and components

Frame

In order to further enhance occupant comfort this product range offers especially low noise levels. The casing is made of galvanised sheet steel with full high-efficiency internal lining for optimised thermal and sound insulation of the unit.

In order to comply with the various local regulations (fire class), the fan coil unit is available with both class M1 type insulation (in compliance with NF P 92-507) and Euroclass level B-s3-d0 (in compliance with EN 13501).

In order to reduce the dimensions to the minimum, the units are equipped with high-efficiency heat exchangers with very high cooling capacity/treated air flow ratios. The condensate drain pan height is optimised.

Fan motor assemblies

Low consumption fan motor (variable-speed LEC motor)

Motor description

- Permanent magnet brushless motor.
- Electronically commutated.
- Class B winding insulation, varnish class F.
- For the limits of use, see the "Limits of use" section at the end of the document.

The 42NX units are equipped with the LEC fan motor, which is controlled by a 0-10 V signal, available with the Carrier NTC or WTC type electronic control.

NOTE: In this case, the minimum control signal that allows the motor to start is 2 V for the two- and four-pipe versions.

If the product is supplied without a Carrier control device, verification of EMC conformity is the responsibility of the installer.

Fan wiring solutions

The motor on the 42NX units can be selected with different wiring solutions.

Bare wires with or without plastic protective cover (standard)

In this case, the variable-speed low energy consumption (LEC) motor must be controlled by a 0-10 VDC signal.

A plastic cover can be provided as an option to house a controller supplied by the customer (dimensions L = 333 mm x D = 134.5 mm x H = 190.5 mm). It can be installed on site or at the factory.

With electrical terminal strip

This option allows the installer to connect the unit to a terminal strip located inside an electrical enclosure. The electrics box can be opened with a screwdriver.

The 0-10 VDC signal that controls the variable-speed fan is directly accessible on the terminal strip.

The choice of this terminal strip option allows quick installation and wiring of Carrier 33ET or 33TT thermostat range.

Two types of electrical protection are available as options with the electrical box or the NTC and WTC controllers: the circuit breaker or the fuse holder.

Main modules and components

Filter

The 42NX is fitted as standard with a non-regenerative ISO coarse 50% filter in line with the ISO 16890 standard.
A non-regenerative ISO ePM10 50% pleated filter in line with the ISO 16890 standard is also available as an option.
Both types of filter have a moderate fire rating of M1.
To prevent coil fouling, Carrier recommends the use of a filter installed in either the fan coil unit or in the return air grille.
The 42NX offers three filtration configurations:

- Without filter.
- Filter: ISO coarse 50%, metal frame, medium efficiency, supplied as standard.
- Filter: ISO ePM10 50%, high efficiency, 22 mm thick.

NOTE: The filter option is not available with the Compact U model.

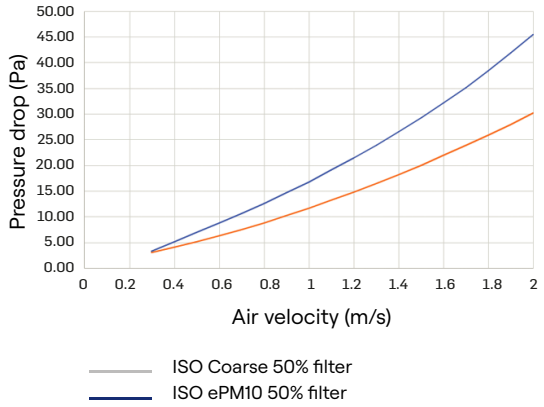

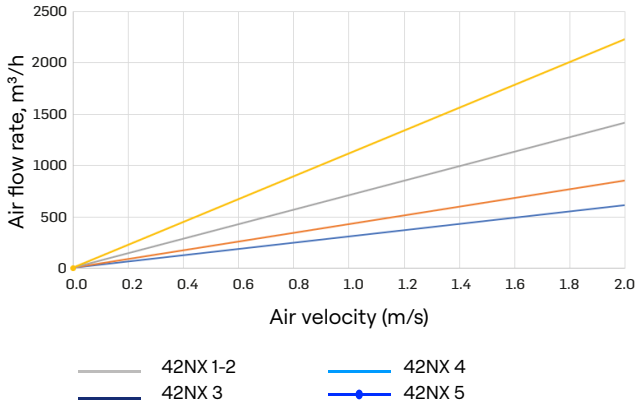

For sizes 1 to 5, the filter is accessed via a hatch on the underside of the unit, which can be removed using two quarter-turn screws.

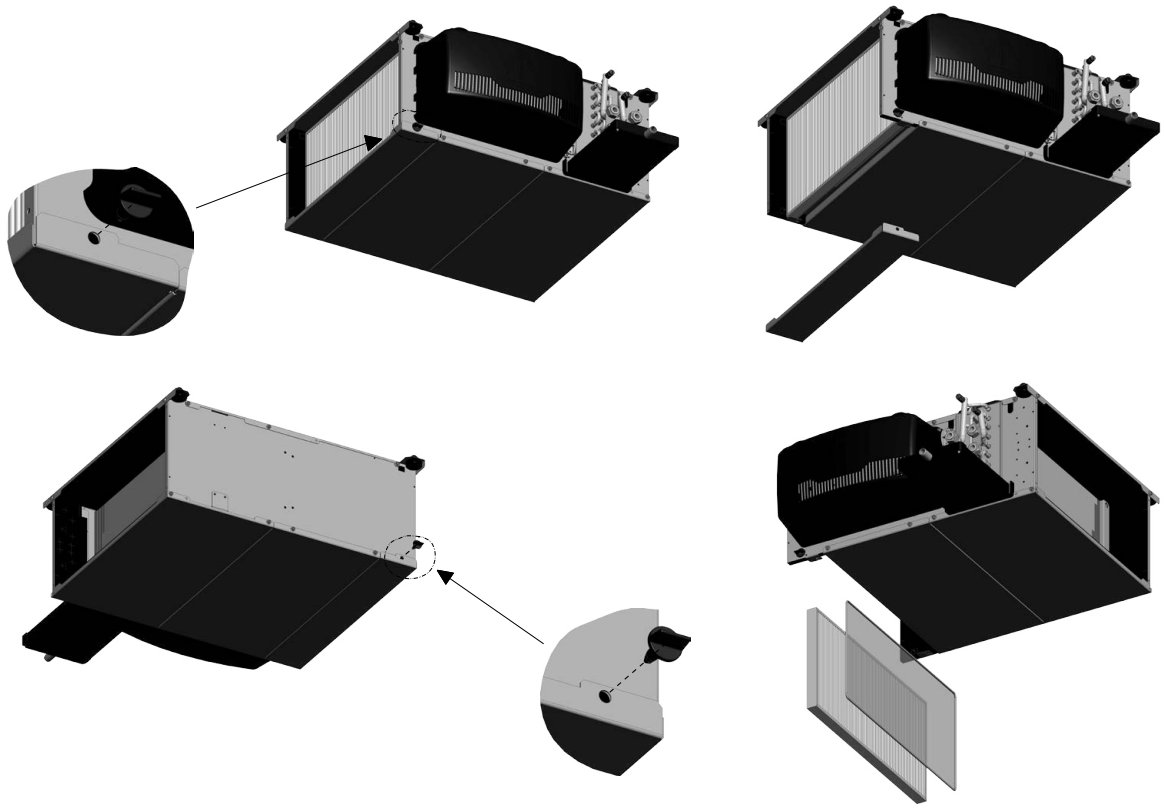

Main modules and components

For 42NX 5, without plenum and with ISO coarse 50% filter option, the filter is maintained by clips.

Hydraulic coil

- Aluminium fins mechanically bonded by expansion onto copper pipes.
- 1/2-inch threaded female water inlet and outlet connections for sizes 1 to 4.
- 3/4-inch threaded female water inlet and outlet connections for size 5.
- Air bleed valves and drain as standard.
- 16 bar rated service pressure (at 20 °C), 18 bar test pressure.

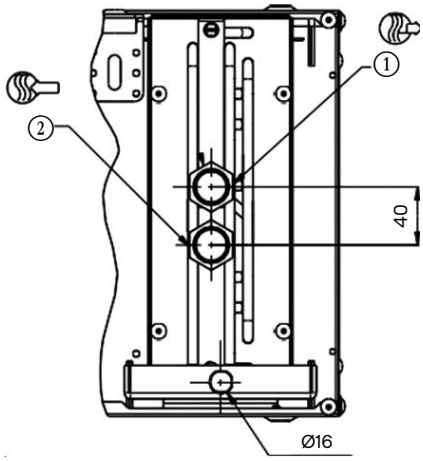

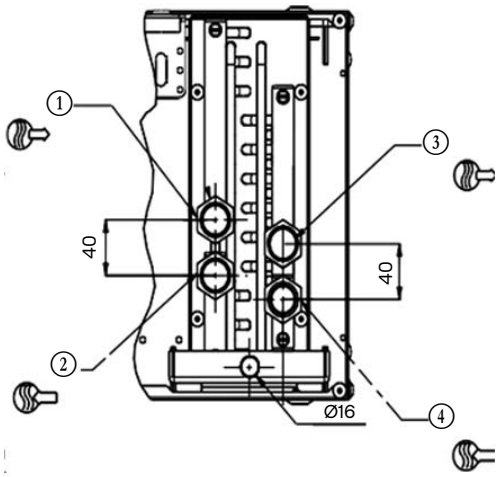

DN:
1/2" size 1 to 4.
3/4" size 5.

1. Cooling water outlet for 4-pipe coil and heating/cooling for 2-pipe coil.
2. Water inlet, cooling for 4-pipe coil and heating/cooling for 2-pipe coil.
3. Heating water outlet (4-pipe coil).
4. Heating water inlet (4-pipe coil).

Single unit condensate drain pan

- Single unit condensate drain pan made from polypropylene and insulated with 5 mm of foam.
- Drain connection diameter: Ø 16 mm external.

Specifications for the options

Constant volume fresh air controller

The 42NX ductable terminal unit can be equipped as an option with a constant fresh air flow controller which allows the intake of fresh air and the air change rate to be controlled.

The fresh air supply can be located on the side of the casing or, in the compact U model, on the blanking panel.

Three models are available:

- Ø100 or 125 mm - Flow rates of 15 to 50 m³/h.
- Ø100 or 125 mm - Flow rates of 50 to 100 m³/h.
- Ø125 mm - Flow rates of 120 to 180 m³/h.

The fresh air controller can be adjusted on-site using the adjustment screw.

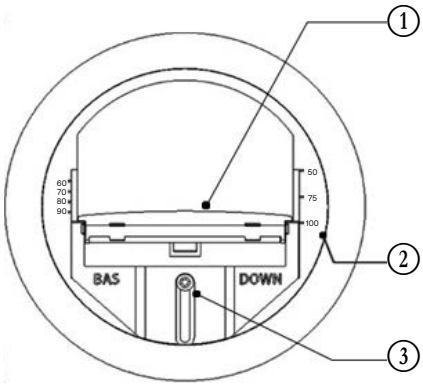

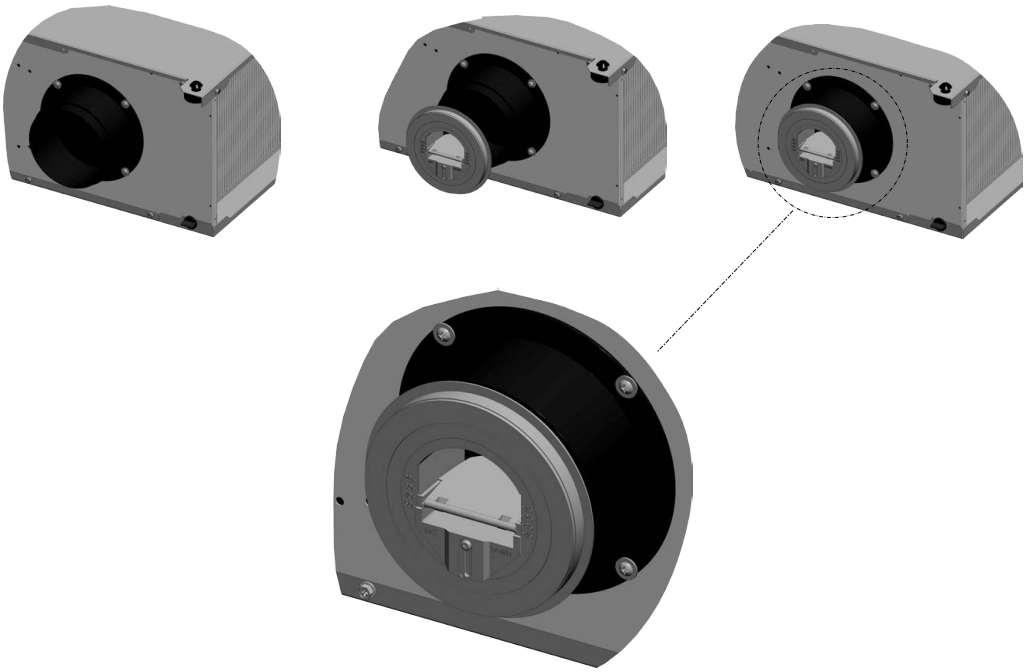

NOTE: To ensure the flow rate controllers operate correctly, a differential pressure of between 60 and 210 Pa is required.

1. Air damper.
2. Fresh air damper position setting (in m³/h) .
3. Air flow adjustment screw.

Specifications for the options

Variable volume fresh air controller (IAQ valve)

The 42NX ductable terminal unit can accept (as an option) an IAQ valve combining a differential pressure measurement component and a fresh air flow controller with a variable valve (from 0 to 200 m^3/h), driven by a progressive 24 VAC actuator with a 0-10 VDC input signal.

Connected and supplied by the Carrier NTC or WTC digital control, the IAQ valve can regulate the intake of fresh air in two ways:

- Either using a fixed rate set by the installer that can be reconfigured as required.
- or according to the CO_2 concentration. In this case, it is controlled by the CO_2 sensor which is connected via the Carrier digital control.

NOTE: The IAQ valve is supplied separately. Its remote installation on the fresh air network is recommended to limit nuisance noise in the room.

To be able to read the differential pressure correctly, the connection shall be made with a minimum straight length of 180 mm, whilst avoiding any disruption to the air flow upstream of the measurement component. The upstream pressure in the duct network must be 180 Pa or greater.

Sensors

CO_2 sensor

As an option with the Carrier NTC control, and combined with the variable flow fresh air flow controller, a CO_2 sensor placed at the unit's air return ensures the correct CO_2 level in the rooms to be conditioned. A 0-10 VDC analogue output is used to precisely adjust the fresh air flow over a measurement range from 0 to 2000 ppm.

Air temperature sensors

Two factory-fitted air temperature sensors are available as an option for NTC and WTC controller. They measure the temperature at the supply and return side.

Water temperature sensor

A water temperature sensor can be provided as an option for NTC and WTC controllers:

- For a 2-tube coil: the sensor is installed on the hot/cold water coil inlet (for the changeover function).
- For a 4-tube coil: the sensor is installed on the hot water coil inlet (for the cold-draught function that prevents the operation of the unit when the hot water network is off).

While the fan coil unit is delivered with an electrics box, the "water temperature sensor" option is actually a switch that will be connected to the Carrier thermostat. (Only in the case of a 2-pipe coil without electrical heater).

Specifications for the options

Valves and actuators

NOTE: The electrothermic valve + actuator assemblies are normally closed when there is no voltage.

Valve actuators

A wide choice of actuators is available with two- or four-way valve bodies (three-way with integral bypass) to offer the right solution for any controller type and customer requirement, from on/off to proportional types, with either 230 V or 24 V power supply:

- 230 V ON/OFF actuator.
- 24 V ON/OFF actuator.
- 230 V 3-point floating actuator.
- 24 V 3-point floating actuator.
- 0-10 V/24 V modulating actuator.

NOTE: The 24 V power supply actuators are not compatible with Carrier controllers (Thermostats C/D, WTC and NTC).

- 3-point floating actuator:
  - Supply voltage 230 V~ +/-10% – 50/60 Hz.
  - Stepper motor.
  - Power up and activity checked using an LED.
  - Cable length: 2 m (3 × 0.5 mm²).
  - Index of Protection: IP43 - Vertical or horizontal assembly.
  - Quiet, and maintenance-free.
  - Assembly on the valve using an M30×1.5 nut.
  - Operating limit: room temperature 0 to 50 °C.
  - Opening time 0-100% (travel of 3 mm): ~39 sec.
  - Power input during operation: 2 W – 6.5 VA.

Specifications for the options

When combined with LEC motors and the WTC or NTC, 230 V 3-point floating actuators are recommended to increase energy savings and enhance comfort.

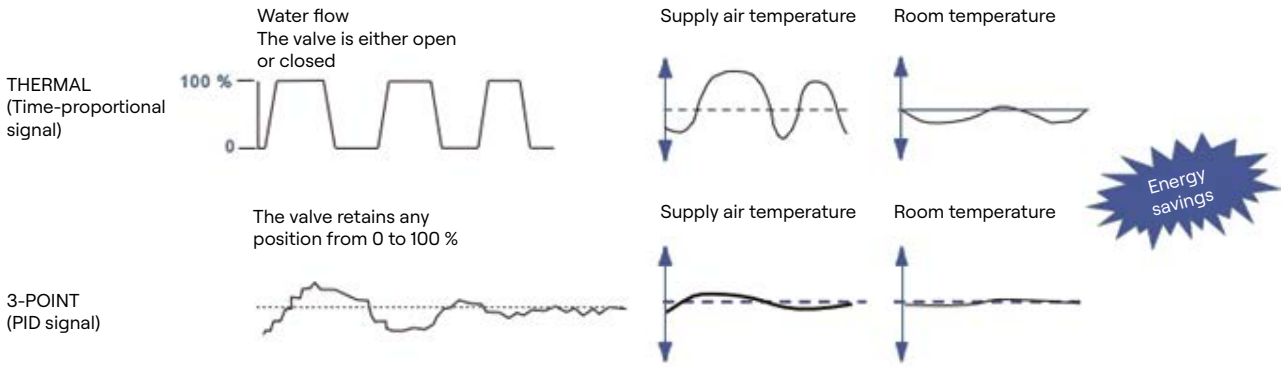

A 3-point motor actuator enables a valve to be actuated as close as possible to the control system requirements, by controlling its position between 0 and 100 % (water flow control). The terminal unit supply air temperature is more stable and the room temperature varies very little (variations cause discomfort).

This temperature stability not only ensures optimal comfort, it also allows energy savings to be made.

The 3-point actuator uses no electricity when the thermal balance is struck, unlike the thermal motor (return on investment on the energy savings made: 2 - 3 years).

Standard two-way valve body and three-way valve body (with integral bypass)

Specifications for the two-way and three-way valves

- Straight valve body with arrow indicating direction of flow embossed on valve body.
- Nominal pressure: PN 16 bar.

Diameters and Kvs for standard 2-way or 3-way valves with bypass with thermal actuator

		42NX 1	42NX 2	42NX 3	42NX 4	42NX 5
2-pipe system	Ø Female hot or cold water coil Ø Male valve Kvs	G 1/2" G 1/2" Kvs = 1,6	G 1/2" G 1/2" Kvs = 1,6	G 1/2" G 1/2" Kvs = 1,6	G 1/2" G 1/2" Kvs = 1,6	G 3/4" G 3/4" Kvs = 3,5
4-pipe system	Ø Female cold water coil Ø Male valve Kvs	G 1/2" G 1/2" Kvs = 1,6	G 1/2" G 1/2" Kvs = 1,6	G 1/2" G 1/2" Kvs = 1,6	G 1/2" G 1/2" Kvs = 1,6	G 3/4" G 3/4" Kvs = 3,5
	Ø Female hot water coil Ø Male valve Kvs	G 1/2" G 1/2" Kvs = 1,6	G 1/2" G 1/2" Kvs = 1,6	G 1/2" G 1/2" Kvs = 1,6	G 1/2" G 1/2" Kvs = 1,6	G 3/4" G 3/4" Kvs = 2,5

Diameters and Kvs for standard 2-way or 3-way valves with bypass with 3-point actuator

		42NX 1	42NX 2	42NX 3	42NX 4	42NX 5
2-pipe system	Ø Female hot or cold water coil Ø Male valve Valve flow rate	G 1/2" G 1/2" Kvs = 0,63	G 1/2" G 1/2" Kvs = 0,63	G 1/2" G 1/2" Kvs = 1	G 1/2" G 1/2" Kvs = 1,6	G 3/4" G 3/4" Kvs = 3,5
4-pipe system	Ø Female cold water coil Ø Male valve Valve flow rate	G 1/2" G 1/2" Kvs = 0,63	G 1/2" G 1/2" Kvs = 0,63	G 1/2" G 1/2" Kvs = 1	G 1/2" G 1/2" Kvs = 1,6	G 3/4" G 3/4" Kvs = 3,5
	Ø Female hot water coil Ø Male valve Valve flow rate	G 1/2" G 1/2" Kvs = 0,63	G 1/2" G 1/2" Kvs = 0,63	G 1/2" G 1/2" Kvs = 0,63	G 1/2" G 1/2" Kvs = 1	G 3/4" G 3/4" Kvs = 2,5

Specifications for the options

Two way balancing valve body

Two-way valves with embedded balancing technology are available as an option with 42NX units. The Carrier two-way valve with balancing function combines the functionality of a dynamic balancing valve and a control valve in one product.

The dynamic balancing function maintains a constant differential pressure over the control valve.

The control valve regulates the flow rate by means of a variable orifice which is controlled by the actuator.

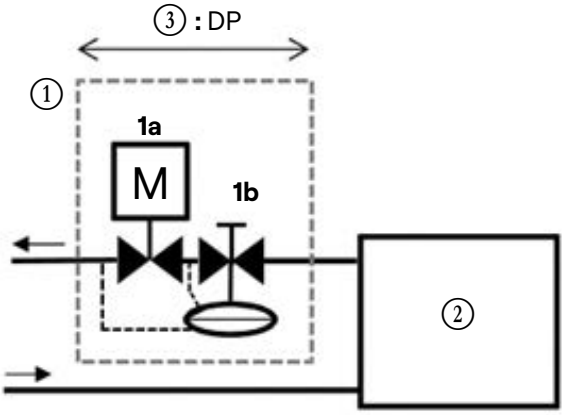

Key

① Two-way valve with balancing function.
1a. Valve actuator for waterflow control.
1b. Differential pressure controller & balancing feature.

② Fan coil unit.

③ Minimum operating pressure drop at rated water flow rate: 20 kPa for size 5.

Diameters and flow rate range for automatic balancing two-way valves

		42NX 121M 222M	42NX 223H 224M 322M	42NX 323H 324M 422M 423H 424M	42NX 522M 523M 524M
2-pipe system	Ø Female hot or cold water coil	1/2"	1/2"	1/2"	3/4"
	Ø Male valve	1/2" Male	3/4" Male	3/4" Male	1" Male
	Valve flow rate	65-370 l/h	100-575 l/h	220-1330 l/h	300-1800 l/h
		42NX 142M 243M 243H	**42NX 244M 343M 343H 344M 443M**	**42NX 444H**	**42NX 543M 544M**
4-pipe system	Ø Female cold water coil	1/2"	1/2"	1/2"	3/4"
	Ø Male valve	1/2" Male	3/4" Male	3/4" Male	1" Male
	Valve flow rate	65-370 l/h	220-1330 l/h	220-1330 l/h	300-1800 l/h
	Ø Female hot water coil	1/2"	1/2"	1/2"	3/4"
	Ø Male valve	1/2" Male	3/4" Male	3/4" Male	3/4" Male
	Valve flow rate	30-200 l/h	100-575 l/h	220-1330 l/h	220-1330 l/h

The constant differential pressure across the control valve ensures accurate control and maximises valve authority, independently of the pressure conditions in the system.

Advantages compared to the standard two-way valve

- Improved and reliable commissioning. The water flow can be set and controlled on site.
- Higher energy efficiency due to optimal waterflow and maximized valve authority.
- Enhanced comfort thanks to stable and precise ambient temperature control.

Specifications for the options

Condensate drain pump

The condensate drain pump (optional) is a split unit pump with an oscillating piston designed to fit on the side of the condensate pan. The oscillating piston fulfils the function of a check valve, preventing the return of condensates to the pan and shutting down the pump and blocking the siphoning effect of the pump unit and thereby prevent any risk of damage from running dry.

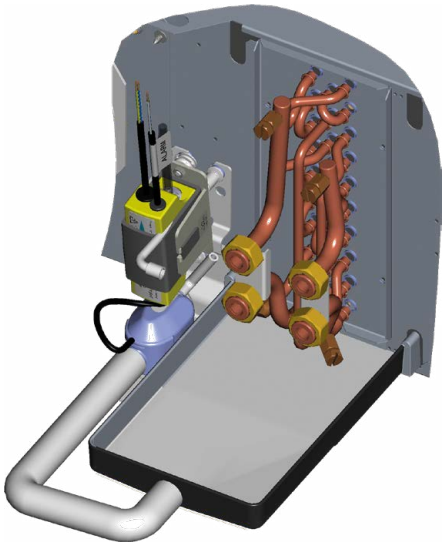

Technical characteristics	Size 1 to 4	Size 5
Maximum flow rate	10,4 l/h	17 l/h
Max. discharge height	7 m (flow rate = 4 l/h)	> 8 m (flow rate 4 l/h)
Maximum pressure	10 m (flow rate 0 l/h)	14 m (flow rate 0 l/h)
Sound level at 1 m as per EN ISO 3744 and 4871 (Measurement taken at LNE, pump in water, outside of application)	20,2 dBA	<28 dBA
Power supply	230 V +10%/-15% - 50/60 Hz – 19 W	230 V +10%/-15% - 50/60 Hz – 19 W
Electrical insulation class	Class 1	Class 1
Detection levels	ON: 14,7 mm, OFF: 10,7 mm, AL: 17 mm	ON: 14,7 mm, OFF: 10,7 mm, AL: 17 mm
Safety switch	NC: 5 A resistive – 250 V Contacts made from AgNI 90/10, gold-plated	NC: 5 A resistive – 250 V Contacts made from AgNI 90/10, gold-plated
Heat protection (overheating)	70 °C (automatic restart)	70 °C (automatic restart)
Operating cycle (duty factor)	100%	100%
Protection (as per NF EN60529)	IP64	IP64
Safety standard	CE	CE
RoHS directive	Compliant	Compliant
WEEE directive	Compliant	Compliant

Specifications for the options

Sizes 1 to 4: Water flow rate in litres per hour (-15% / +20%)				
Discharge height	Horizontal length of the discharge pipe			
	5 metres	10 metres	20 metres	30 metres
1 metre	10,4	9,1	8,3	7,3
2 metres	8,5	7,8	7	6,4
3 metres	7,9	7,1	6,3	5,8
4 metres	7	6	5,3	4,9

Size 5: Water flow rate in litres per hour (-15% / +20%)				
Discharge height	Horizontal length of the discharge pipe			
	5 metres	10 metres	20 metres	30 metres
1 metre	17	17	16	14
2 metres	14	14	13,5	11,2
3 metres	13	13	12	9,5
4 metres	11,5	10,5	10	8,3

Electric heater (option for 2-pipe water coil)

Resistive wire type coil:

- Supply voltage: 230 V – 1 ph – 50 Hz.
- Number of coils and capacity per unit (+5% ; -10%).
- The coil is protected with a dual safety device:

a) Self-holding automatically reset integrated safety thermostat

b) Destructive thermofuse link

Available for 2-pipe coils only.

WARNING: A minimum supply air flow rate must be maintained to avoid damaging the electric heaters.

Electrical heater capacity							
42NX 1	1×500W	1×800W	-	-	-	-	-
42NX 2	1×500W	1×800W	1×1000W	-	1×1600W	-	-
42NX 3	1×500W	1×800W	1×1000W	-	1×1600W	-	-
42NX 4	-	-	2×500W	-	2×800W	2×1000W	-
42NX 5	-	-	-	3×500W	-	-	3×1000W

Water coil with coating

Hydraulic coil with protected fins for harmful/corrosive atmospheres (coastal locations, or areas close to chemical industries).

False floor

The unit is accessed from the top for easy maintenance, and it is attached from the bottom.

Specifications for the options

The unit can be supplied with a wide range of Carrier controls. These offer functions to suit the various application requirements, summarised in the table below.

	Thermostats	NTC	WTC
Communication protocols			
Carrier Communication Network (CCN) Aquasmart compatible		x	
BACnet MSTP			x
Control algorithms			
On-off	x		
Proportional-integral		x	x
Carrier Energy saving algorithm		x	x
Fan control			
3 fixed speeds for EC motors	Types C and D	x	x
EC motors Variable speed		x	x
Water valve management			
Air flow control only (no water valve)	x		
230 V On-Off actuators	x	x	x
230 V modulating actuators (floating 3-pt)		x	x
Main functions			
Setpoint control	x	x	x
Occupied/unoccupied mode	x	x	x
Frost protection mode	x	x	x
Window/door contact input	x	x	x
Measurement of water temperature for automatic changeover (2-pipe)	C type	x	x
Measurement of water inlet temperature to prevent cold draughts (4-pipe and 2-pipe + electric heater)	Type D	x	x
Manual changeover	x	x	x
Frost protection mode	x	x	x
Continuous ventilation within dead-band	x	x	x
Periodical ventilation within dead-band	x	x	x
On-site configuration	x	x	x
Group function (lead/lag)	x	x	x
Cassette Louvers control		x	x
Supply air temperature monitoring limiting		x	x
Electrical heater loadshed		x	x
Dirty filter alarm		x	x
Alarm reporting		x	x
Indoor air quality control (CO_2 sensor)		o	o
Demand-controlled ventilation (DCV) (0-10 V fresh air valve)		o	o
Free cooling mode			o
Presence detection			o

Key

x Feature available as standard.
o Optional.

NOTE: For the features and specifications of the Carrier controllers mentioned above, refer to the technical documentation for each controller. Upon special request, other controller types can be factory-installed on the units (supplied by Carrier or the customer).

Specifications for the options

	Thermostats	NTC	WTC
User interfaces			
Automatic or manual fan speed control	x	x	x
Setpoint adjustment	x	x	x
Occupancy (eco) button	x	x	o
Digital display		o	o
CO_2 sensor		o	o
Control kit			
On site control kit solution			o

Key

x Feature available as standard.
o optional.

NOTE: For the features and specifications of the Carrier controllers mentioned above, refer to the technical documentation for each controller. Upon special request, other controller types can be factory-installed on the units (supplied by Carrier or the customer).

Specifications for the options

Name of the feature	Type key digit no.	Value	Description	Compatibility
Range	1-4	42NX		
Chassis size	5	1	Chassis size 1	
		2	Chassis size 2	
		3	Chassis size 3	
		4	Chassis size 4	
		5	Chassis size 5	
Water coil type	6	2	2-pipe coil	
		4	4-pipe coil	
Number of water coil rows	7	1	1-row coil	
		2	2-row coil	
		3	3-row coil	
		4	4-row coil	
Efficiency	8	M	Medium efficiency	
		H	High efficiency	
Water coil with coating	9	-	No coating	
		C	With coating	
Water coil side in the air flow direction	10	L	Coil on the left	
		R	Coil on the right	
Electrical heater	11	-	Without electric heater	
		A	500 W electric heater	
		B	1000 W electric heater	
		C	800 W electric heater	
		D	1500 W electric heater	
		E	1600 W electric heater	
		F	2000 W electric heater	
		G	2400 W electric heater	
		H	3000 W electric heater	
Control	18	I	Electric terminal block	To control the unit with a thermostat, select the electrical terminal block
		A	Regulation on air	
		B	Regulation on water	
		G	Bare wire with plastic cover	
		H	Bare wire without plastic cover	
		K	NTC	
		M	WTC BACNET	
Control type	19-24	33ETC+	Thermostat 33ET+ C	
		33ETD+	Thermostat 33ET+ D	
		33TT--	Thermostat 33TT	
User interface	25	-	Without	
		C	Thermostat 33ET+ C	
		D	Thermostat 33ET+ D	
		E	Thermostat 33TT	
Valve body	26	-	Without valve	
		G	Two-way valve	
		H	Four-way valve	
		L	Two-way balancing valve	
		T	Two-way balancing valve and pressure points	

Specifications for the options

Name of the feature	Type key digit no.	Value	Description	Compatibility
Valve actuator	27	-	Without actuator	The 24 V actuators are not available with the Carrier controllers and the electrical terminal strip The 3-point floating actuators are not available with the electrical terminal strip
		A	230 V ON/OFF actuator	
		C	230 V floating actuator (3-point)	
		B	24 V ON/OFF actuator	
		D	24 V floating actuator (3-point)	
		E	0-10 V/24 V modulating actuator	
Sensors	28	-	No sensor	
		A	Return air temperature sensor	
		B	Water temperature sensor	
		C	Return air and water temperature sensor	
		D	Return air, water and CO_2 temperature sensor	
		E	Return air, supply air, water and CO_2 temperature sensor	
		F	Return air and supply air temperature sensor	
		G	Supply air and water temperature sensor	
		H	Supply air temperature sensor	
		L	Water and CO_2 temperature sensor	
		M	Return air, supply air and water temperature sensor	
		N	Supply air, water and CO_2 temperature sensor	
		P	Return air, supply air and CO_2 temperature sensor	
		Q	CO_2 sensor	
		R	Return air and CO_2 temperature sensor	
		S	Supply air and CO_2 temperature sensor	
Electrical protection	29	-	No electrical protection	
		F	Fuse holder	
		C	Circuit breaker	
Condensate pump	30	-	Without pump	
		P	With pump	

Specifications for the options

Name of the feature	Type key digit no.	Value	Description	Compatibility
Installation configuration	31-32-33	IFC	Rectangular connection to the return air and supply air for suspended ceiling	For installation in a suspended ceiling
		YFC	Rectangular connection to the return air or supply air and round connection to the supply air or return air for suspended ceiling	For installation in a suspended ceiling
		HFC	Round connection to the return air and supply air for suspended ceiling	For installation in a suspended ceiling
		UFC	Lateral round connection to the return air and supply air for suspended ceiling	For installation in a suspended ceiling
		IFF	Rectangular connection to the return air and supply air for raised floor	For installation in a raised floor
		YFF	Rectangular connection to the return air or supply air and round connection to the supply air or return air for raised floor	For installation in a raised floor
		HFF	Round connection to the return air and supply air for raised floor	For installation in a raised floor
		UFF	Lateral round connection to the return air and supply air for raised floor	For installation in a raised floor
		UC-	Lateral round connection to the return air and supply air for compact suspended ceiling	For installation in a suspended ceiling
Filter	34	-	Without filter	
		G	ISO Coarse 50%	
		P	ePM10 50%	
Rectangular sleeve	35	-	Without rectangular sleeve	
		A	Supply air rectangular sleeve only	
		B	Return air rectangular sleeve only	
		C	Return air and supply air rectangular sleeve	
Diameter and number of return connections	36-37	--	No connection	
		A1	1 connection 160 mm in diameter	
		A2	2 connections 160 mm in diameter	
		A3	3 connections 160 mm in diameter	
		B1	1 connection 200 mm in diameter	
		B2	2 connections 200 mm in diameter	
		B3	3 connections 200 mm in diameter	
		B4	4 connections 200 mm in diameter	
		B5	5 connections 200 mm in diameter	
		C1	1 connection 250 mm in diameter	
		C2	2 connections 250 mm in diameter	
		C3	3 connections 250 mm in diameter	
		C4	4 connections 250 mm in diameter	

Specifications for the options

Name of the feature	Type key digit no.	Value	Description	Compatibility
Diameter and number of supply air connections	38-39	--	No connection	
		A1	1 connection 160 mm in diameter	
		A2	2 connections 160 mm in diameter	
		A3	3 connections 160 mm in diameter	
		B1	1 connection 200 mm in diameter	
		B2	2 connections 200 mm in diameter	
		B3	3 connections 200 mm in diameter	
		B4	4 connections 200 mm in diameter	
		B5	5 connections 200 mm in diameter	
		C1	1 connection 250 mm in diameter	
		C2	2 connections 250 mm in diameter	
		C3	3 connections 250 mm in diameter	
		C4	4 connections 250 mm in diameter	
Fresh air	40	-	Without controller	
		A	Sleeve 100 mm in diameter	
		B	15 to 50 m^3/h controller for connection 100 mm in diameter	
		C	50 to 100 m^3/h controller for connection 100 mm in diameter	
		D	Sleeve 125 mm in diameter	
		E	15 to 50 m^3/h controller for connection 125 mm in diameter	
		F	50 to 100 m^3/h controller for connection 125 mm in diameter	
		G	100 to 180 m^3/h controller	
		H	Adapter for motorised air damper (to be ordered separately)	Motorised air damper compatible with NTC and WTC only (position feedback is not available if the WTC and the CO_2 sensor are also selected)
Packaging	41	B	Bundle packaging	
		I	Individual packaging	
Labelling	42	-	No labelling	
		A	With individual labelling	
Anti-vibration mounts	44	-	No mounts	
		A	With mounts	
Condensate drain pan extension	45	-	No extension	
		E	With condensate drain pan extension	
Flexible hose	46	-	Without connection hose	
		F	With flexible connection hose	

Dimensional drawings

I version assembly without sleeve

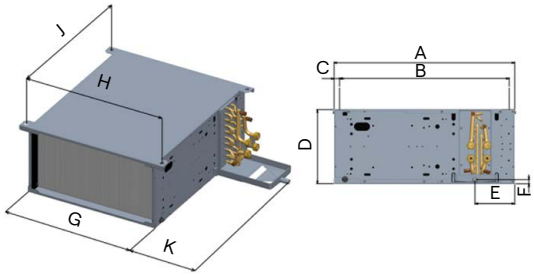

Dimensions in mm					
Size	**42NX 1**	**42NX 2**	**42NX 3**	**42NX 4**	**42NX 5**
A	560	560	560	560	568
B	526	526	526	526	384
C	17	17	17	17	26
D	229	229	229	229	279
E	123	123	123	123	89
F	12	12	12	12	12
G	455	455	622	1022	1321
H	485	485	652	1052	1371
J	526	526	526	526	384
K	226	226	226	226	226
G + K	681	681	848	1248	1547
Weight [kg]	14,8	14,8	18,1	26,8	35,3

I version assembly with rectangular return air and supply air sleeves

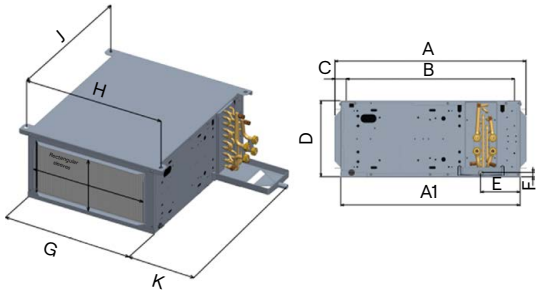

Dimensions in mm					
Size	**42NX 1**	**42NX 2**	**42NX 3**	**42NX 4**	**42NX 5**
A	596	596	596	596	671
B	526	526	526	526	384
C	35	35	35	35	103
D	229	229	229	229	280
E	123	123	123	123	87
Rectangular sleeves	396 X 177	396 X 177	563 X 177	963 X 177	1252 X 210
F	12	12	12	12	12
A1	560	560	560	560	615
G	455	455	622	1022	1323
H	485	485	652	1052	1370
J	526	526	526	526	384
K	226	226	226	226	226
G + K	681	681	848	1248	1549
Weight [kg]	15,4	15,4	18,9	28,0	39,8

Dimensional drawings

H version assembly

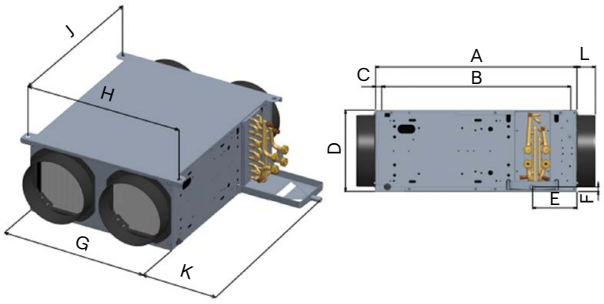

Dimensions in mm						
Size	**42NX 1**	**42NX 2**	**42NX 3**	**42NX 4**	**42NX 5 - Without filter**	**42NX 5 - With filter**
A	560	560	560	560	666	714
B	526	526	526	526	384	384
C	17	17	17	17	25	74
D	229	229	229	229	279	280
E	123	123	123	123	187	187
F	12	12	12	12	12	12
G	455	455	622	1022	1320	1323
H	485	485	652	1052	1370	1370
J	526	526	526	526	384	384
K	226	226	226	226	226	226
L	52	52	52	52	51	53
M					100	100
N						49
G + K	681	681	848	1248	1546	1549
Weight [kg]	16,2	16,2	19,9	29,8	39,4	42,1

Dimensional drawings

U version assembly

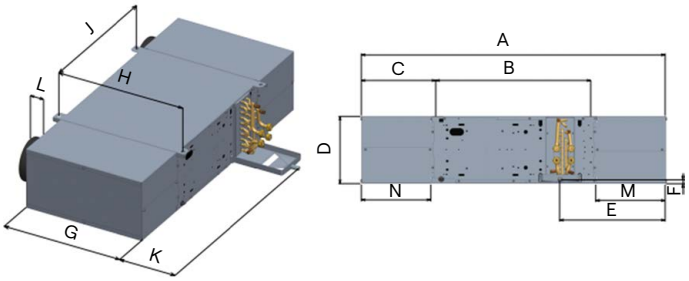

Dimensions in mm					
Size	**42NX 1**	**42NX 2**	**42NX 3**	**42NX 4**	**42NX 5**
A	1029	1029	1029	1029	1197
B	526	526	526	526	384
C	252	252	252	252	350
D	229	229	229	229	279
E	358	358	358	358	395
F	12	12	12	12	12
G	453	453	620	1020	1324
H	485	485	652	1052	1370
J	526	526	526	526	384
K	227	227	227	227	226
L	52	52	52	52	53
M	235	235	235	235	307
N	235	235	235	235	324
G + K	680	680	847	1247	1550
Weight [kg]	21,6	21,6	29,8	40	54,9

Dimensional drawings

Compact U version assembly

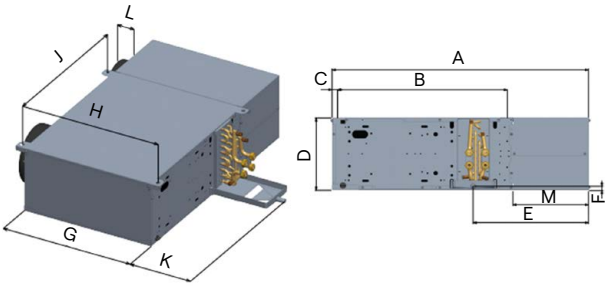

Dimensions in mm					
Size	**42NX 1**	**42NX 2**	**42NX 3**	**42NX 4**	**42NX 5**
A	795	795	795	795	
B	526	526	526	526	
C	17	17	17	17	
D	229	229	229	229	
E	358	358	358	358	
F	12	12	12	12	
G	455	455	622	1022	
H	485	485	652	1052	
J	526	526	526	526	
K	226	226	226	226	
L	52	52	52	52	
M	235	235	235	235	
G + K	681	681	848	1248	
Weight [kg]	18,6	18,6	22,9	34,1	

Dimensional drawings

Y version assembly, supply air or return air

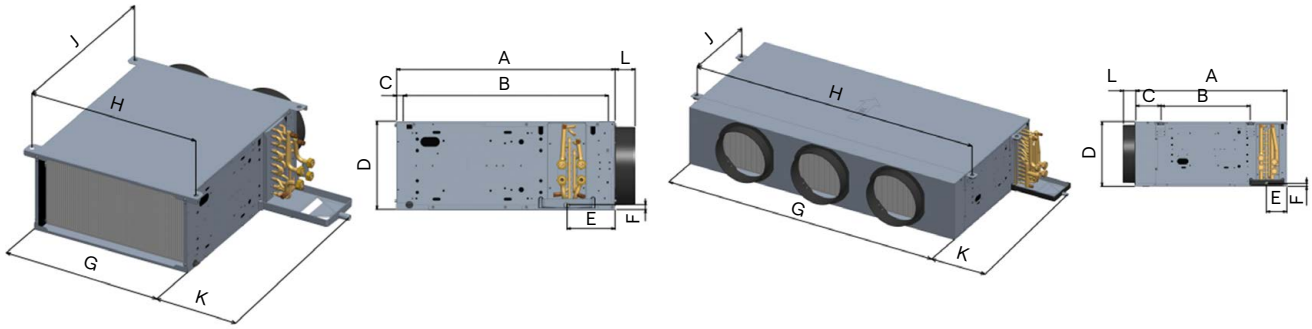

Dimensions in mm							
Size	**42NX 1**	**42NX 2**	**42NX 3**	**42NX 4**	**42NX 5 return air without plenum / supply air with plenum**	**42NX 5 return air with plenum / supply air without plenum**	**42NX 5 return air with plenum + filter / supply air without plenum**
A	560	560	560	560	666	566	615
B	526	526	526	526	384	384	384
C	17	17	17	17	25	25	74
D	229	229	229	229	279	279	279
E	123	123	123	123	187	87	87
F	12	12	12	12	12	12	12
G	455	455	622	1022	1320	1320	1323
H	485	485	652	1052	1370	1370	1370
J	526	526	526	526	384	384	384
K	226	226	226	226	226	226	226
L	52	52	52	52	53	53	53
M					100		
N							49
G + K	681	681	848	1248	1546	1546	1549
Weight [kg]	15,6	15,6	19,1	28,4	37,7	37,2	40,3

Dimensional drawings

Y version assembly, supply air or return air with sleeve

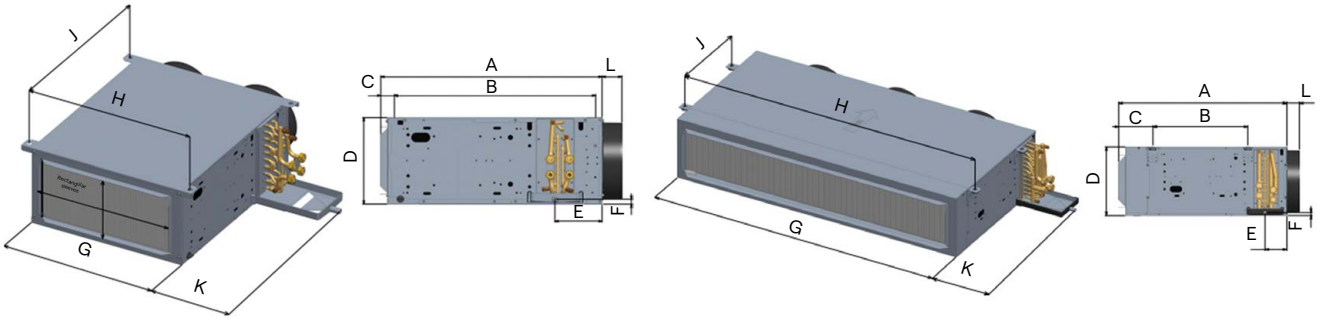

Dimensions in mm								
Size	**42NX 1**	**42NX 2**	**42NX 3**	**42NX 4**	**42NX 5 return air with flange / supply air with plenum**	**42NX 5 return air with plenum / supply air with flange**	**42NX 5 return air with plenum + filter / supply air with flange**	**42NX 5 return air with flange + filter / supply air with plenum**
A	578	578	578	578	693	593	642	744
B	526	526	526	526	384	384	384	384
C	35	35	35	35	52	25	74	103
D	229	229	229	229	279	279	280	280
E	123	123	123	123	187	87	87	187
F	12	12	12	12	12	12	12	12
G	455	455	622	1022	1320	1320	1323	1323
H	485	485	652	1052	1370	1370	1370	1370
J	526	526	526	526	384	384	384	384
K	226	226	226	226	226	226	226	226
L	52	52	52	52	53	53	53	53
M					100			100
N							49	78
G + K	681	681	848	1248	1546	1546	1549	1560
Weight [kg]	15,9	15,9	19,5	29	38,2	38,3	41	41,5

Performance of the 42NX

42NX		121M			222M			223H		
Coil type		**2-pipe**			**2-pipe**			**2-pipe**		
Fan speed	V	**2**	**4**	**7**	**2**	**3,6**	**7**	**2**	**3,6**	**7**
Air flow	l/s	31	61	87	39	91	116	38	90	120
	m³/h	111	221	312	142	328	417	138	325	433
Cooling mode										
Total cooling capacity	kW	0,65	1,07	1,36	0,94	1,81	2,01	0,94	1,93	2,38
Sensible cooling capacity	kW	0,56	0,94	1,23	0,71	1,44	1,65	0,71	1,52	1,91
Water flow	l/s	0,031	0,048	0,059	0,049	0,083	0,101	0,053	0,110	0,136
	l/h	110	172	212	178	298	363	192	395	489
Water pressure drop, cooling mode	kPa	12	30	44	10	26	35	8	28	40
Water volume	l	0,2			0,4			0,5		
Heating mode										
Heating capacity	kW	0,79	1,34	1,66	1,12	2,14	2,56	1,12	2,31	2,91
Water flow	l/s	0,037	0,060	0,049	0,051	0,089	0,111	0,051	0,105	0,131
	l/h	132	216	176	185	320	399	185	378	471
Water pressure drop, heating mode	kPa	14	36	54	9	25	34	7	21	31
Water volume	l	0,2			0,4			0,5		
Electric heater										
Maximum capacity	W	500 / 800			500 / 800 / 1000 / 1600			500 / 800 / 1000 / 1600		
Current input	A	2,20 / 3,50			2,20 / 3,50 / 4,30 / 7,0			2,20 / 3,50 / 4,30 / 7,0		
Noise level										
INLET+RADIATED Sound power level	dB(A)	31	48	56	31	54	58	38	52	58
OUTLET Sound power level	dB(A)	31	46	55	33	52	58	32	51	58
GLOBAL Sound power level	dB(A)	34	50	59	35	56	61	39	55	61
Input power	W	6	17	39	6	25	54	6	27	56
Current input	A	0,03	0,07	0,17	0,03	0,11	0,23	0,02	0,12	0,24
EUROVENT FCEER energy class (cooling mode)		B			B			B		
EUROVENT FCCOP energy class (heating mode)		A			A			A		

Performance of the 42NX

42NX		322M			323H			422M		
Coil type		**2-pipe**			**2-pipe**			**2-pipe**		
Fan speed	V	**2**	**4,3**	**7**	**2**	**4,7**	**7**	**2**	**5,5**	**8**
Air flow	l/s	36	130	168	41	129	158	56	218	283
	m³/h	131	467	606	147	466	568	200	785	1017
Cooling mode										
Total cooling capacity	kW	0,97	2,49	3,14	1,22	3,45	3,90	1,16	4,32	5,09
Sensible cooling capacity	kW	0,76	2,16	2,60	0,89	2,56	2,89	0,95	3,53	4,26
Water flow	l/s	0,046	0,115	0,134	0,061	0,159	0,190	0,065	0,199	0,237
	l/h	167	413	483	219	572	683	233	715	853
Water pressure drop, cooling mode	kPa	4	21	33	3	25	34	4	38	47
Water volume	l	0,7			0,9			1,4		
Heating mode										
Heating capacity	kW	1,08	2,92	3,46	1,34	3,67	4,01	1,42	4,94	5,88
Water flow	l/s	0,050	0,131	0,155	0,060	0,165	0,199	0,072	0,242	0,296
	l/h	180	470	557	216	593	715	259	870	1067
Water pressure drop, heating mode	kPa	5	27	36	3	25	29	4	40	59
Water volume	l	0,7			0,9			1,4		
Electric heater										
Maximum capacity	W	500 / 800 / 1000 / 1600			500 / 800 / 1000 / 1600			1000 / 1600		
Current input	A	2,20 / 3,50 / 4,30 / 7,0			2,20 / 3,50 / 4,30 / 7,0			4,30 / 7,0		
Noise level										
INLET+RADIATED Sound power level	dB(A)	27	53	58	28	54	59	28	55	61
OUTLET Sound power level	dB(A)	27	53	58	27	53	58	28	55	61
GLOBAL Sound power level	dB(A)	30	56	61	31	57	62	31	58	64
Input power	W	5	37	68	5	42	74	5	57	114
Current input	A	0,02	0,16	0,30	0,02	0,18	0,32	0,02	0,25	0,50
EUROVENT FCEER energy class (cooling mode)		B			A			A		
EUROVENT FCCOP energy class (heating mode)		A			A			A		

Performance of the 42NX

42NX		423H			522M			523M			524M		
Coil type		**2-pipe**			**2-pipe**			**2-pipe**			**2-pipe**		
Fan speed	V	**2**	**5,5**	**8**	**2**	**7**	**8**	**2**	**7**	**8**	**2**	**7**	**8**
Air flow	l/s	67	221	283	134	442	487	125	409	453	121	431	467
	m³/h	240	794	1019	483	1592	1752	452	1473	1630	435	1551	1682
Cooling mode													
Total cooling capacity	kW	1,47	5,73	6,95	3,47	8,64	9,11	2,83	9,54	10,59	2,97	9,52	10,08
Sensible cooling capacity	kW	1,14	4,37	5,33	2,65	7,22	7,67	2,24	7,56	8,26	2,43	8,02	8,55
Water flow	l/s	0,063	0,244	0,304	0,150	0,384	0,431	0,136	0,434	0,494	0,144	0,487	0,558
	l/h	225	879	1094	541	1384	1552	488	1561	1780	519	1753	2010
Water pressure drop, cooling mode	kPa	2	42	60	11	77	85	6	61	78	22	53	59
Water volume	l	1,8			1,4			2			2,6		
Heating mode													
Heating capacity	kW	1,62	6,03	7,40	3,65	10,10	10,44	3,64	10,42	11,49	3,12	10,59	11,48
Water flow	l/s	0,065	0,265	0,335	0,161	0,461	0,528	0,156	0,509	0,602	0,156	0,542	0,644
	l/h	233	955	1206	580	1660	1902	561	1833	2167	560	1951	2320
Water pressure drop, heating mode	kPa	4	45	67	15	99	108	6	61	83	15	52	60
Water volume	l	1,8			1,4			2			2,6		
Electric heater													
Maximum capacity	W	1000 / 1600			1500 / 2400 / 3000			1500 / 2400 / 3000			1500 / 2400 / 3000		
Current input	A	4,30 / 7,0			6,5 / 10,4 / 13,0			6,5 / 10,4 / 13,0			6,5 / 10,4 / 13,0		
Noise level													
INLET+RADIATED Sound power level	dB(A)	25	56	61	44	60	62	44	60	62	44	61	64
OUTLET Sound power level	dB(A)	27	55	61	40	59	61	40	59	61	41	60	63
GLOBAL Sound power level	dB(A)	29	58	64	45	63	65	45	63	65	46	64	67
Input power	W	5	67	134	10	137	179	10	128	168	10	137	177
Current input	A	0,02	0,29	0,58	0,04	0,59	0,78	0,04	0,56	0,73	0,04	0,60	0,77
EUROVENT FCEER energy class (cooling mode)		A			A			A			A		
EUROVENT FCCOP energy class (heating mode)		A			A			A			A		

Performance of the 42NX

42NX		142M			243M			243H		
Coil type		**4-pipe**			**4-pipe**			**4-pipe**		
Fan speed	V	**2**	**4**	**7**	**2**	**3,6**	**7**	**2**	**4,3**	**7**
Air flow	l/s	30	60	86	35	84	110	36	130	168
	m³/h	110	216	309	125	301	395	131	467	606
Cooling mode										
Total cooling capacity	kW	0,62	1,03	1,28	0,86	1,76	2,08	0,97	2,49	3,14
Sensible cooling capacity	kW	0,50	0,90	1,17	0,71	1,45	1,76	0,76	2,16	2,60
Water flow	l/s	0,031	0,048	0,059	0,046	0,081	0,101	0,041	0,082	0,100
	l/h	110	172	212	167	292	365	149	294	360
Water pressure drop, cooling mode	kPa	11	27	40	3	12	16	4	21	33
Water volume	l	0,2			0,3			0,3		
Heating mode										
Heating capacity	kW	0,93	1,52	1,91	1,16	2,23	2,60	1,08	2,92	3,46
Water flow	l/s	0,024	0,045	0,064	0,029	0,048	0,058	0,027	0,048	0,058
	l/h	85	163	232	106	173	210	96	174	208
Water pressure drop, heating mode	kPa	6	13	19	3	6	8	5	27	36
Water volume	l	0,1			0,2			0,2		
Noise level										
INLET+RADIATED Sound power level	dB(A)	31	48	56	35	53	58	27	53	58
OUTLET Sound power level	dB(A)	31	46	55	33	49	55	27	53	58
GLOBAL Sound power level	dB(A)	34	50	59	37	54	60	30	56	61
Input power	W	6	18	39	6	26	52	5	37	68
Current input	A	0,03	0,07	0,1	0,1	0,2	0,4	0,1	0,2	0,4
EUROVENT FCEER energy class (cooling mode)		B			B			B		
EUROVENT FCCOP energy class (heating mode)		A			A			A		

Performance of the 42NX

42NX		343M			343H			443M		
Coil type		**4-pipe**			**4-pipe**			**4-pipe**		
Fan speed	V	**2**	**4,3**	**7**	**2**	**4,7**	**7**	**2**	**5,5**	**8**
Air flow	l/s	36	127	166	42	127	157	54	218	276
	m³/h	131	458	596	152	456	565	194	784	993
Cooling mode										
Total cooling capacity	kW	0,96	2,92	3,58	1,11	2,91	3,40	1,47	4,62	5,51
Sensible cooling capacity	kW	0,75	2,36	2,87	0,87	2,35	2,72	1,05	3,68	4,41
Water flow	l/s	0,048	0,127	0,149	0,051	0,127	0,149	0,071	0,224	0,263
	l/h	173	456	537	182	457	537	257	805	947
Water pressure drop, cooling mode	kPa	5	26	36	6	30	42	7	53	70
Water volume	l	0,6			0,6			1,1		
Heating mode										
Heating capacity	kW	1,40	3,59	4,33	1,62	3,58	4,11	2,31	6,20	7,35
Water flow	l/s	0,030	0,071	0,083	0,032	0,072	0,083	0,044	0,124	0,144
	l/h	109	257	298	115	258	299	159	447	519
Water pressure drop, heating mode	kPa	3	14	19	4	14	18	9	55	70
Water volume	l	0,3			0,3			0,5		
Noise level										
INLET+RADIATED Sound power level	dB(A)	27	53	58	28	54	59	28	55	61
OUTLET Sound power level	dB(A)	27	53	58	27	53	58	28	55	61
GLOBAL Sound power level	dB(A)	30	56	61	31	57	62	31	58	64
Input power	W	5	37	67	5	42	75	5	60	116
Current input	A	0,1	0,3	0,5	0,1	0,3	0,5	0,1	0,4	0,7
EUROVENT FCEER energy class (cooling mode)		A			A			A		
EUROVENT FCCOP energy class (heating mode)		A			A			A		

Operating limits

42NX		444H			543M			544M		
Coil type		**4-pipe**			**4-pipe**			**4-pipe**		
Fan speed	V	**2**	**5,5**	**8**	**2**	**7**	**8**	**2**	**7**	**8**
Air flow	l/s	67	216	278	125	409	453	121	431	467
	m³/h	240	779	1000	452	1473	1630	435	1551	1682
Cooling mode										
Total cooling capacity	kW	1,65	5,84	6,62	2,91	8,32	8,88	3,08	9,95	10,48
Sensible cooling capacity	kW	1,21	4,30	4,96	2,29	6,79	7,29	2,33	7,67	8,14
Water flow	l/s	0,077	0,289	0,342	0,122	0,203	0,413	0,140	0,459	0,519
	l/h	276	1039	1230	439	729	1485	504	1652	1867
Water pressure drop, cooling mode	kPa	5	44	54	7	49	54	7	60	66
Water volume	l		1,4			1,3			1,7	
Heating mode										
Heating capacity	kW	2,42	6,51	7,77	4,71	11,24	11,78	3,54	12,79	13,61
Water flow	l/s	0,049	0,147	0,169	0,075	0,236	0,271	0,082	0,293	0,334
	l/h	178	529	608	270	848	976	295	1056	1202
Water pressure drop, heating mode	kPa	2	12	17	5	23	24	4	30	33
Water volume	l		0,6			0,7			0,9	
Noise level										
INLET+RADIATED Sound power level	dB(A)	25	56	61	44	60	62	44	61	64
OUTLET Sound power level	dB(A)	27	55	61	40	59	61	41	60	63
GLOBAL Sound power level	dB(A)	29	58	64	45	63	65	46	64	67
Input power	W	6	68	118	10	128	168	10	137	177
Current input	A	0,1	0,4	0,8	0,04	0,56	0,73	0,04	0,6	0,77
EUROVENT FCEER energy class (cooling mode)			A			A			A	
EUROVENT FCCOP energy class (heating mode)			A			A			A	

Operating limits

	Limits of use	
Supply voltage	230 V +- 10%. Check that supply voltage and frequency correspond to the values for the unit to be installed.	
Frequency	60 or 50 Hz -1ph	
Index of Protection for the unit	IP 2X	
Impact protection rating	IK 02	
Maximum altitude	2000 m	
Minimum and maximum storage and transport temperatures	-20 °C; +65 °C	
Minimum and maximum operating temperatures	0 °C + 40 °C	
Water coil mode	Cooling	Heating
Water circuit	Min. inlet temperature > 5 °C	Max. inlet temperature < 80 °C
	Ethylene / propylene glycol content < 40%	
	Water side pressure < 1600 kPa (16 bar)	
Ambient temperature and humidity	T < Environment in which the unit is to be used 27 °C / 65 % RH (relative humidity) or humidity weight < 14,7 g/kg dry air	40 °C
Supply air temperature	T > 12°C with maximum ambient humidity conditions (14,7 g/kg dry air)	T < 60°C with supply plenum and application of spigots