T2

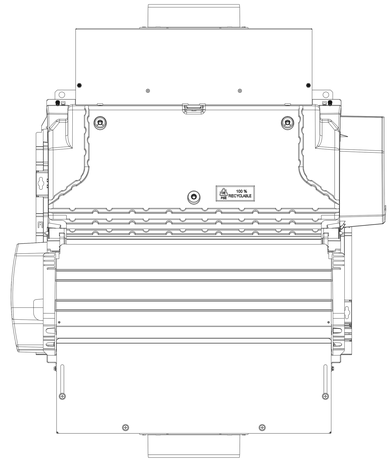

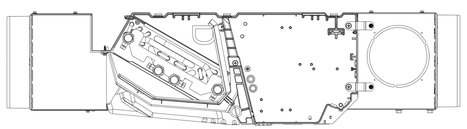

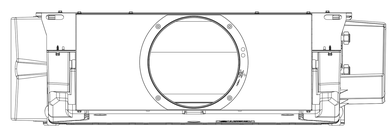

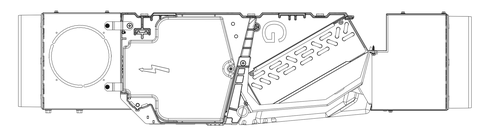

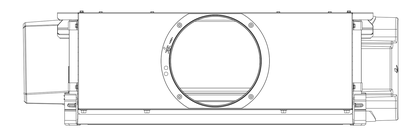

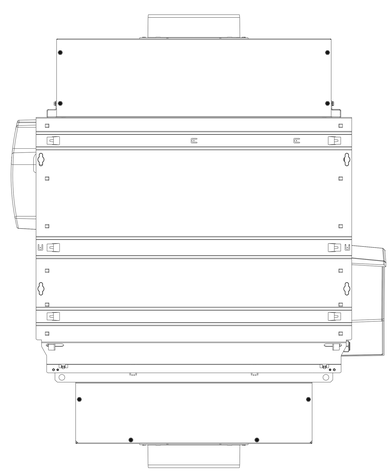

AMERICAINE THIRD ANGLE PROJECTION / FRANCAISE THIRD ANGLE PROJECTION	TOLERANCE ±10	42NI -	Carrier	DATE 12-Feb-20	Feuille Sheet 1/3
				42NI	Indice A

T3

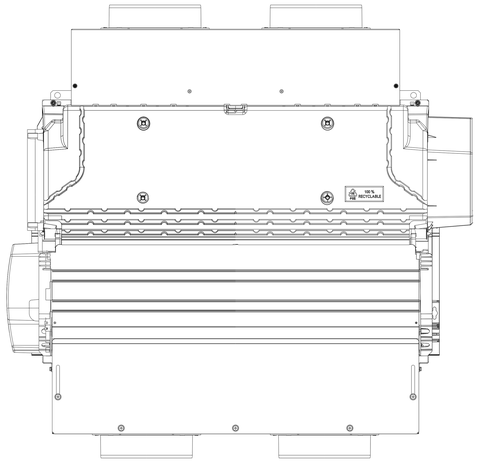

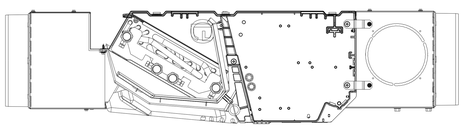

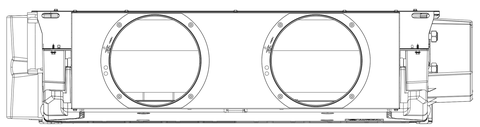

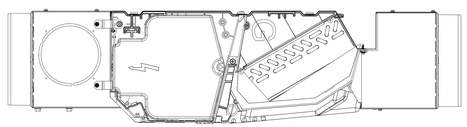

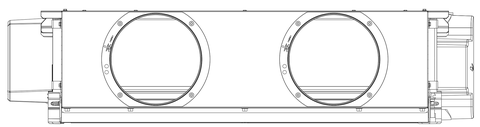

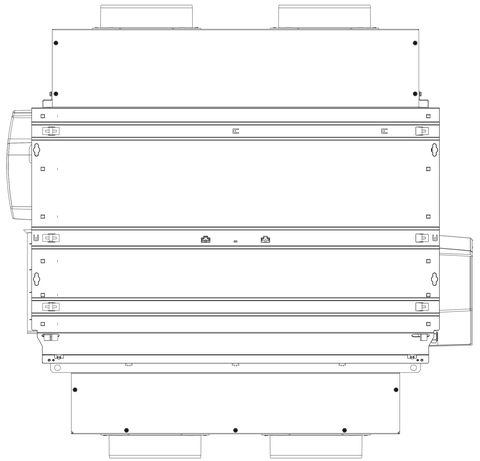

AMERICAINE THIRD ANGLE PROJECTION / FRANCAISE THIRD ANGLE PROJECTION	TOLERANCE ±10	42NI -	Carrier	DATE 12-Feb-20	Feuille Sheet 2/3
			42NI		Indice A

T4

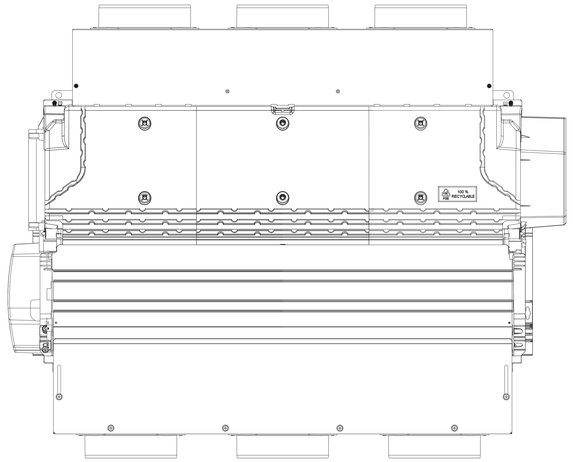

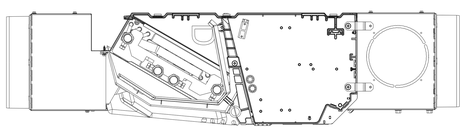

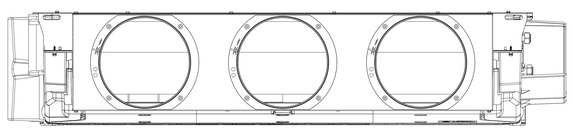

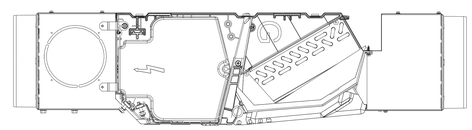

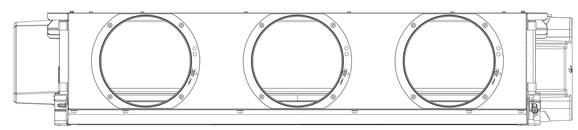

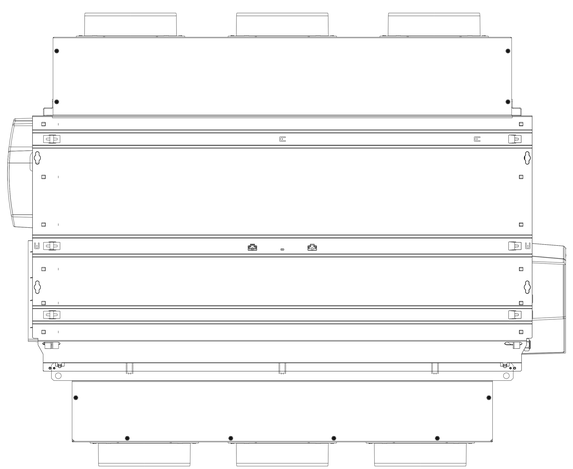

AMERICAINE THIRD ANGLE PROJECTION / FRANCAISE THIRD ANGLE PROJECTION	TOLERANCE ±10	42NI -	Carrier	DATE 12-Feb-20	Feuille Sheet 3/3
				42NI	Indice A